Motorised Cable Reels

REEL S071

Manufactured by Cavotec Specimas

Cavotec Specimas Cable Reels

The Cavotec Group

Cavotec is the name of a group of companies specialized in power supply technology for cranes and other industrial equipment. It is formed by 6 manufacturing "Centres of Excellence" located in Canada, France, Germany, Italy and Sweden and by 5 local manufacturing units located in Australia, China, Germany, Sweden and USA.
For distribution of their products and support to customers Cavotec has 22 sales companies which, together with a network of distributors, serve more than 30 countries on five continents.
Each manufacturing company, no matter where it is located, aims at being a market leader in its field by providing innovative and reliable products to our customers.
Although they manufacture different products in different countries, they are globally supported and coordinated by the Cavotec Group in their product development and marketing activities.
Each sales company, and each distributor, has a policy aiming at better serving its local market with the full support of the Cavotec Group.

Our aim is to be local everywhere

Great emphasis is put in providing the highest quality not only in the selected products, but also in service and support to their customers. Our philosophy is to be local everywhere.

Our fields of activity are

Ports & Terminals

Mining & Tunnelling

Steel Mills & Aluminium plants

Airports

Energy & Offshore

Shipyards & Maritime Industry

General Industry & Automation

Cavotec Sales Companies

The products manufactured by Cavotec Specimas described in the following pages, as well as other quality products in the field of crane and power technology, are distributed around the world by the Cavotec sales companies and by a network of selected distributors.

Cavotec Specimas manufacturing facility near Milan.

Contents

Cavotec Group Organization

The graph on this page shows how the Cavotec Group is organised to support its customers around the world.
In the centre we have placed the Cavotec manufacturing units, sales companies and Group Partners. On the sides we have placed our key suppliers and distributors. Their combined technological competence and common approach to the market are the secret of the ability of the Cavotec Group to provide specialised and direct assistance to its customers, no matter where they are located in the world.

CAVOTEC KEY SUPPLIERS

Flexible Cables

- Nexans - France
- Pirelli - Germany & Italy
- Baude - Germany
- Gore - Germany
- Aristoncavi - Italy
- Tratos - Italy
- Amercable - USA

Crane Controllers

- Gessmann - Germany

EEx-proof Slipring Columns

- ACS - Norway

Rotating Connectors

- Electa - Italy
- Mercotac - USA

Cable Ladders

- Wibe - Sweden

EEx Lighting Fixtures

- Italsmea - Italy

Spreaders

- Bromma - Sweden

CAVOTEC MANUFACTURING

Centres of Excellence

- Cavotec RMS - France
  - *Spring Driven Reels*
- Cavotec Alfo - Germany
  - *Spring Driven Reels*
  - *Slipring Columns*
- Cavotec Specimas - Italy
  - *Motorised Cable Reels*
  - *Panzerbelt® Cable Protection*
  - *Slipring Columns*
- Cavotec Connectors - Sweden
  - *Electrical Plugs & Sockets*
- Gantrex - Canada
  - *Crane Rail Systems*
- M. Fladung GmbH - Germany
  - *Airport Support Systems*
  - *Physical Security Systems*

Local Manufacturing

- Cavotec Metool - Australia
  - *Motorised Cable Reels*
- Cavotec China - China
  - *Product Assembly*
- Cavotec AixRail - Germany
  - *Crane Rail Systems*
- Cavotec Sverige - Sweden
  - *Product Assembly*
- Cavotec Inc. - USA
  - *Product Assembly*

Group Partners

- Brevetti Stendalto - Italy
  - *Nylon & Steel Cable Chains*
- Micro-control - Norway
  - *Radio Remote Control*
- De Jong - The Netherlands
  - *Permanent Elevators*
- Gantry - Belgium
  - *Crane Rail Systems*
- Mooring Systems - New Zealand
  - *Automated Mooring Systems*

CAVOTEC SALES COMPANIES

- Cavotec Australia
- Cavotec BeNeLux
- Cavotec China
- Cavotec Denmark
- Cavotec Finland
- Cavotec France
- Cavotec Germany
- Cavotec Hong Kong
- Cavotec Indonesia*
- Cavotec Italy
- Cavotec Korea*
- Cavotec Latin America
- Cavotec Middle East
- Cavotec Norway
- Cavotec Singapore
- Cavotec Gantrex South Africa
- Cavotec Sweden
- Cavotec UK & Ireland
- Cavotec USA

CAVOTEC IN THE AMERICAS

North America

- Cavotec USA - Statesville
- Gantrex USA - Pittsburgh
- Gantrex USA - Houston
- Gantrex USA - Phoenix
- Gantrex USA - Chicago
- Gantrex Canada - Toronto
- Gantrex Mexico - Monterey

South America

- Cavotec Latin America - Buenos Aires
- Gantrex Chile * - Santiago de Chile
- Gantrex Marlin Brazil * - Rio de Janeiro

*= Branch Office

CAVOTEC DISTRIBUTORS

- Egypt - Alexandria Co.
- Japan - Cavotec China
- India - Cavotec ME
- Malaysia - Cavotec Sin.
- New Zealand - Cavo. AU
- Philippines - Cavotec HK
- Saudi Arabia - AKTE
- Taiwan - Ehrung
- Thailand - Cavotec Sin.
- UAE - Cavotec ME
- Vietnam - Cavotec Sin.

Specimas is innovation

Milestones in innovation

1963 **Hydrodynamic Torque Unit**
First motorised cable reel using standard squirrel cage motor.

1965 **Adjustable Monospiral Drum**
First not fully welded and adjustable monospiral drum system.

1969 **Modular Reel**
First motorised reel produced in separate sub-components.

1973 **K-series signal collector**
Highly compact air insulated signal ring collector.

1975 **Panzerflex® flexible cables**
Development of special reeling cable with Palazzo cable manufacturer.

1977 **Pull & Store® cable reel**
First Pull & Store® cable reel system.

1978 **Panzerbelt® cable protection**
First flexible cable protection system for crane applications (patented).

1980 **KK-Collectors**
State of the art collector for harbour cranes.

1982 **Kp-brush system**
First multi-contact brush gear for cable reel collectors and slipring assemblies.

1986 **Electro-magnetic reel**
Introduction of electro-magnetic clutch designed especially for cable reel applications.

1992 **FO-Fibre optic rotary device**
Planetary fibre optic accumulator device (patented).

1993 **T-series gear-boxes**
Compact and cost-efficient gear-box for continuous duty applications.

1994 **Super Panzerbelt® (patented)**

1994 **New Permanent Magnet Clutch design** (patented)

1995 **CTC - Cavotec Torque Control**
CTC technology for direct torque control of high speed cable reels.

1995 **Marine Propulsion Sliprings**

1996 **Spreader reels**

2001 **IReel - New vertical reel design**
Special vertical reel to work with Smart Spreaders

2002 **Cavotec Airport Caddy**

2003 **Alternative Maritime Power Supply Systems**

Specimas history.

Specimas was started in 1963 in Milan by Vittorio Baldoni, a creative Italian engineer who has given an acknowledged contribution to technological development in the field of motorised cable reels. The first customer of the company was Potain, the French world market leader in tower cranes, which is still today a key-customer after having purchased many thousands of Specimas reels.

Thanks to its highly innovative engineering ideas, Specimas became famous quickly: a tradition which has been kept alive through the years by more than 20 major innovations in cable reel technique, including well-known concepts such as Hydrodynamic torque units, Pull & Store reels, Panzerbelt® cable protection system, and multi-contact brush-gear for collectors.
The first Cavotec company was incorporated in Sweden in 1974 as the distributor of Specimas and other electrical equipment, concentrating in power supply for mining and tunnelling, as well as crane equipment.

Ten years later in 1984, Cavotec AB, which in the meantime had become one of the major distributors of Specimas products, purchased Specimas. At this point it was decided to develop Specimas as a manufacturing company specialized in cable reels, while Cavotec concentrated in establishing a network of Cavotec sales and service companies for its world-wide marketing activities.

In 1990 the Cavotec Group purchased the cable reel manufacturing company CTA in Italy and established in Sweden Power Connectors AB, a company devoted to the production of industrial plugs & sockets. In 1997 the Group acquired Alfo GmbH, a German spring reel manufacturer, and in 1999 RMS S.A., a French hose reel manufacturer. In 2001 Specimas changed its name to Cavotec Specimas. In the year 2002 the Cavotec Group acquired Gantrex USA, a major American manufacturer of rail fastening systems. In 2004 the Cavotec Group became the majority shareholder in Fladung GmbH a world leader in airport support systems.

Potain tower crane - 1966

REELS002

Cavotec Specimas today:
a manufacturing company of the Cavotec Group

Cable reels manufactured by Cavotec Specimas are today at work in a number of ports, terminals, mines, tunnels and industries all over the world.

The small factory located just outside Milan, Italy, which started its operations in 1963, has grown into a modern, large factory of 5550 m^2. Local manufacturing facilities of Cavotec Specimas products have been organised in Australia, China, Sweden, UK and USA.

A number of high level qualified engineers and technicians are engaged in research and development with the aid of the most advanced CAD technology, which allows the company to maintain the innovative lead in its field.

The range of Cavotec Specimas motorised cable reels has been enlarged to cover almost any application and requirement.

Cavotec Specimas also produces a complete line of slipring columns as well as the Panzerbelt®, an efficient and economic system for the protection of power cables in ports and terminals.

Cavotec Specimas is committed to quality in products as well as in service.
Its aim is to provide the highest quality standard, as confirmed by the ISO 9001 certificate received from TÜV, a well known German certification and approval organisation.

Specimas is an ISO 9001 certified company by TÜV since 1995.

REP2004

Cavotec Specimas "pull & store" cable reels, Panzerflex cable and Panzerbelt cable protection system at Salalah Container Terminal in Oman.

Guidelines for cable reel selection

The correct selection of a motorised cable reel is of great importance. Cavotec and Cavotec Specimas engineers are at your disposal and will always assist in an accurate selection for each and every application.

Motorised cable reels are usually divided into applications for Horizontal and Vertical Reeling, and a distinction is made between Intermittent Duty and Continuous Duty applications.

For **Intermittent Duty** applications, Cavotec Specimas normally uses the *Hydrodynamic System*, which is particularly suitable for these applications due to its simplicity and high reliability. Compact design, even torque output in reeling and unreeling mode, standard motor and low maintenance are some of the features of this system leading to the production of many thousands of units in the past years. Normal torque outputs are 10-700 daNm with speeds from 10-60 m/min.

For **Continuous Duty** applications, Cavotec Specimas uses the new family of T-series gearboxes, which can be used with several drive systems. In order to optimise costs and technique, Cavotec Specimas uses different drive systems for different applications and sizes. Typical selections are:

Torque Motor
for small reels and slow speed applications (5-40 daNm and 0-60 m/min).

Cavotec Torque Control (CTC)
for the largest reels (torque output 40-750 daNm).

Motorised cable reels normally consist of 5 main components, namely:

1. Motor (with drive)
2. Gearbox or Torque Unit
3. Collector
4. Drum
5. Cable guide

Cavotec Specimas reels can be fitted with different drums such as monospiral, random lay, parallel lay and Pull & Store configuration.

Collectors are available for low and high voltage, up to 20kV, with standard amperage capacities up to 2400 Amps. Motors are standard squirrel cage motors for all reels, except the torque motor reels. Motorised hose reels are also available in standard sizes for any pressures and for up to hose sizes 1/4" to 8".

Necessary data for correct reel selection

1. Type of equipment to be served
2. Working location
3. Cable characteristics (ø, weight, size)
4. Reeling length
5. Reeling speed
6. Acceleration time/deceleration time
7. Installation height
8. Ambient temperature
9. Motor voltage & protection
10. Other special requirements

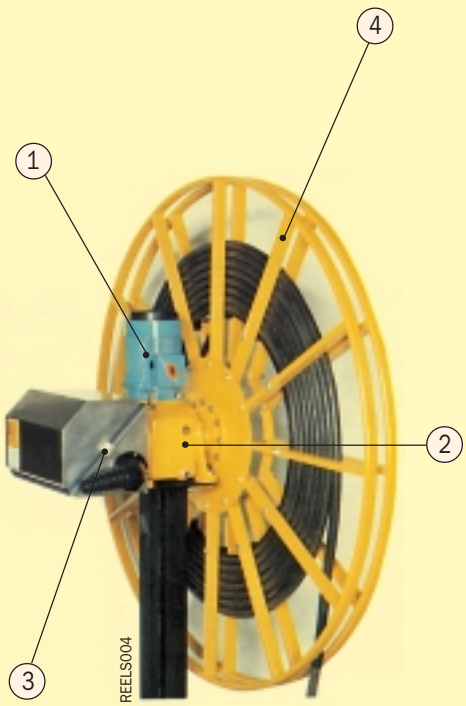

1. Motor (with drive)
Standard squirrel cage motor, according to IEC Norms. Alternatively, the cable reel can be supplied with a pneumatic or hydraulic motor.

2. Gearbox or Torque Unit
7 gearboxes and 8 torque units are available with variable output torque from 10-750 daNm

3. Collector
Standard sizes of collectors are available for power and signals, Current ratings vary from 10 to 2000 Amp, voltages from and voltages up to 20kV. We also manufacture custom-made collectors exceeding the above parameters.

4. Drum
Cavotec Specimas drums are composed of standard elements and can easily be adjusted to the required width. Standard drums sizes vary from 300 mm to 8500 mm diameter.

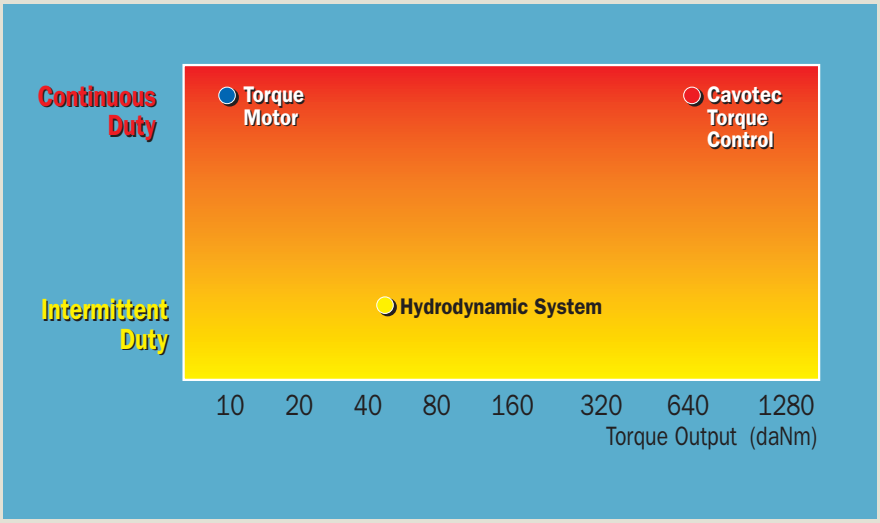

Range of Cavotec Specimas cable reel systems

The chart to the left shows the available Cavotec Specimas cable reel systems for **Continuous Duty** and **Intermittent Duty** applications and their normal working ranges.

For **Continuous Duty,** Cavotec Specimas can offer the following drives: Torque Motor and Cavotec Torque Control (CTC) - all using T-series gearboxes.

For **Intermittent Duty,** Cavotec Specimas offer its well-known Hydrodynamic System with a range of 8 torque units from 10 to 700 daNm. If oversizes these units can also be used for applications with higher duty cycles.

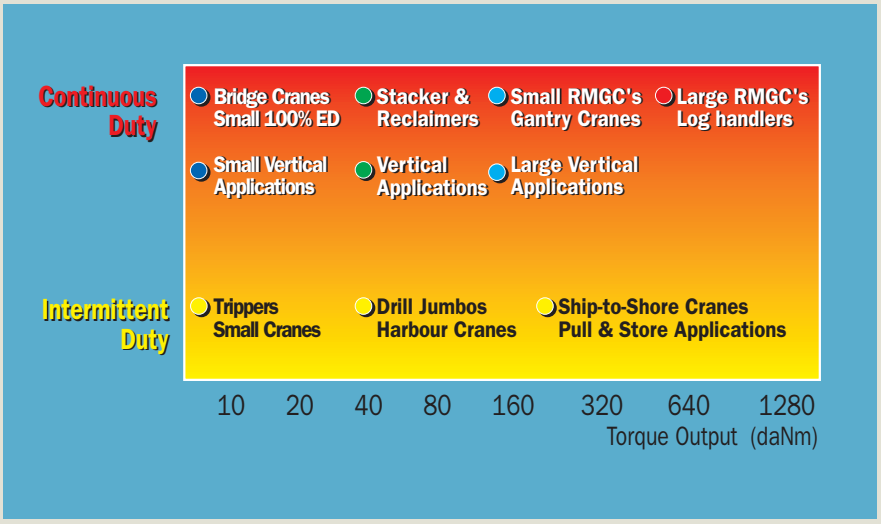

Typical cable reel applications

The chart to the left shows different typical cable reel applications related to the most suitable cable reel system and drive.
Cavotec Specimas designs and supplies a great variety of motorised cable reels for almost any application. Production is based on a large number of standard sub-components which can be combined easily in order to satisfy most needs and requirements.
Special designs are made on request.

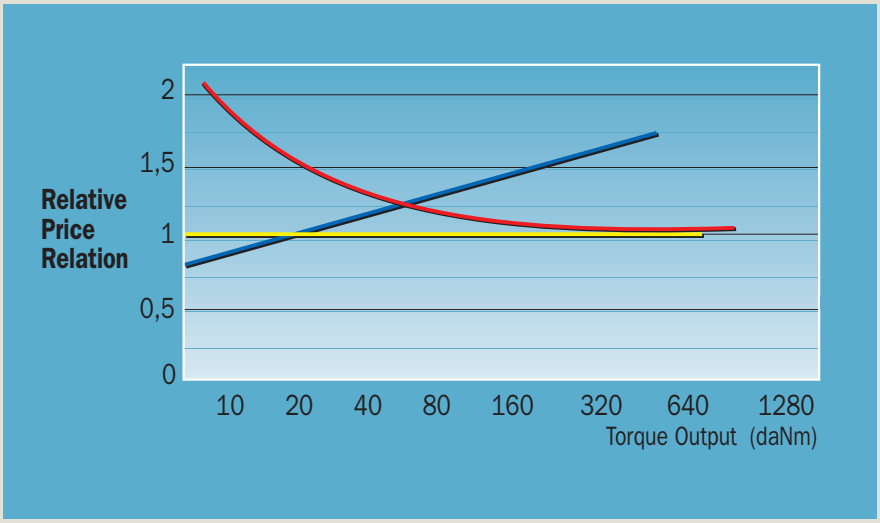

Cost-efficiency of the Cavotec Specimas cable reel systems

Since reeling application parameters (eg. speed, cable size installation high) can vary greatly, it becomes necessary to use different systems and drives to satisfy all needs. These systems have also different cost-efficiencies, as illustrated in simple, but generalised terms, in the diagram to the left.

It is of great importance to choose the correct system for each application, in order to achieve optimal cost-efficiency. Our aim is to offer our customers the most suitable technical solution and the best quality at the lowest possible price.

Hydrodynamic
Torque Motor
CTC

CABLE HOSE REEL SELECTION SHEET
NECESSARY DATA

Please fill out the from below to enable us to quote on your cable reel requirement

1) **Your contact details**

Company:_____ Address:_____
Contact person:_____ Department:_____
Telephone:_____ Facsimile:_____

2) **Application description**

- Type of machine:_____
- Machine application / use:_____
- Working intensity (travel motors / hoist motors):_____ % ED

3) **Ambient conditions**

- Temperature min/max:_____ °C
- Humidity:_____ %
- Type of athmosphere:_____

4) **Cable/Hose details**

- Nr. of conductors x Section of conductors / Hose type:_____ n x mm^2
- Nominal cable voltage / Hose pressure:_____ V/MPa
- Max. outside diameter (or dimensions if flat type):_____ mm
- Weight per metre (without fluid for hose)_____ Kg/m
- Maximum allowable safe continuous tension:_____ N
- For hose application only: type of fluid:_____

5) **Slipring data**

- Nr. of rings:_____
- Max. continuous capacity:_____ Amp

6) **Cable reel motor data**

- Voltage/frequency:_____ V/Hz

Horizontal recovery			Vertical Recovery	
7) Application configuration (please tick the appropriate box)				
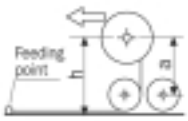	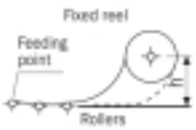	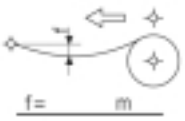	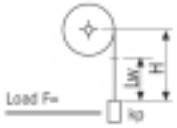	
☐ Mobile application	☐ Stationary application	☐	☐ Vertical downwards	☐ Vertical upwards

8) Feed point position
◯ Centre of runway ◯ End of runway

9) Travel length of equipment
(total runway length): _____ m

10) Active reeling length:_____ m

11) Installation height of cable reel
(distance between drum centre and cable laying level):_____ m

12) Travel speed of equipment:_____ m/min

13) Acceleration time:_____ sec.

10) Active reeling length:_____ m

11) Installation height of cable reel
(total suspended length from drum centre to cable end):_____ m

12) Hoisting speed of equipment:____ m/min

13) Acceleration time:_____ sec.

14) **Notes/Special requirements** _____


REELS072
10

Cavotec Hydrodynamic System

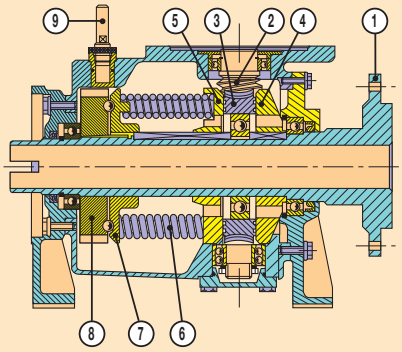

In the torque unit, represented in the sectional drawing above, the clutch is the main component which allows the constant torque output.
The bronze crown gear (3), driven by the motorised worm screw (2), is freely mounted on the drum shaft (1). Its surfaces are specially machined. The two friction plates (4,5) are mounted on both sides of the crown gear.
These are made of steel and are fixed to the drum shaft with a key.
The friction plates are also specially machined so that whilst turning, an oil film is created between the crown gear and the two plates, thus transmitting the torque to the drum shaft.

In order to adjust the clutch to obtain the required output, the torque unit has an adjustable spring assembly, which consists of the rear friction plate (5), a series of springs (6), the spring holder plate (7) and the torque regulating nut (8).
The rear friction plate is fixed to the drum shaft with a key,but can slide along the shaft axis. The torque regulating nut is screwed onto the drum shaft and pushes against the spring holder plate through a series of steel balls.
The torque can therefore be adjusted by placing the torque regulating key (9) upside down into the torque unit. With the torque regulating nut held in position, the drum can be turned manually, thus increasing or decreasing the pressure on the spring assembly, and thereby increasing or decreasing the torque output of the clutch to the necessary output level.

The Cavotec Specimas hydrodynamic torque unit was introduced to the market in 1963. At the time it was the only alternative cable reel system to the traditional torque motor reels, and it was the first system which used conventional squirrel cage electric motors. Still the most unique feature of the Cavotec Specimas hydrodynamic system is that its clutch is acting directly on the main drum shaft.

This gives an even torque output in reeling and unreeling modes, independently of clutch slip or reeling speed, thus assuring a long life for the cable.
The diagram below shows the typical torque/slip diagram for a hydrodynamic torque unit with an unbeaten even torque output. The torque variation due to slip or reeling speed does not exceed 5-10% depending on the torque unit size.

Slip/torque diagram

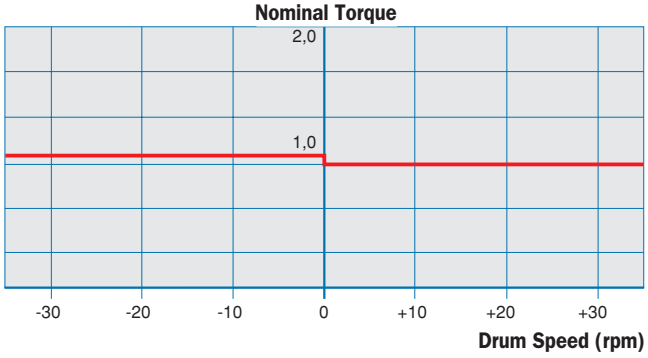

An Atlas Copco drilling rig at work in a Swedish tunneling project, equipped with a Cavotec Specimas cable reel and Cavotec Connectors.

REP20010

Due to its unique patented design, the Cavotec Specimas hydrodynamic system provides a simple and rational solution for many cable and hose reel applications. The system is based on a torque unit in which reduction gear, clutch and brake are built into one closed unit.
It provides a constant torque output, allowing an even recovery of any type of cable.
The Cavotec Specimas hydrodynamic cable reel is driven by a standard squirrel cage motor but can also be supplied with a hydraulic or pneumatic motor.
Another major advantage is that the torque can easily be readjusted on site.
This way, the tension of the cable may be reduced or increased according to the actual requirements.
Cavotec Specimas hydrodynamic cable reels are at work throughout the world on harbour cranes, container cranes, mining machines and mobile cranes.

A Tamrock drill rig equipped with Cavotec Specimas cable and hose reels.

REP20011

Cavotec Specimas hydrodynamic cable and hose reels are used in mines and tunnels all over the world on drilling machines, loaders, scrapers, service vehicles, trippers, stackers, reclaimers and dredgers.

Hydrodynamic Reels — Low Voltage

Cavotec Specimas hydrodynamic reels are assembled from standard sub-components which can be combined to satisfy almost any cable or hose reel requirement. The following tables are therefore only giving a general idea of the existing range and sizes. Cavotec Specimas and Cavotec engineers are at your disposal for the correct choice to meet your specific requirements.

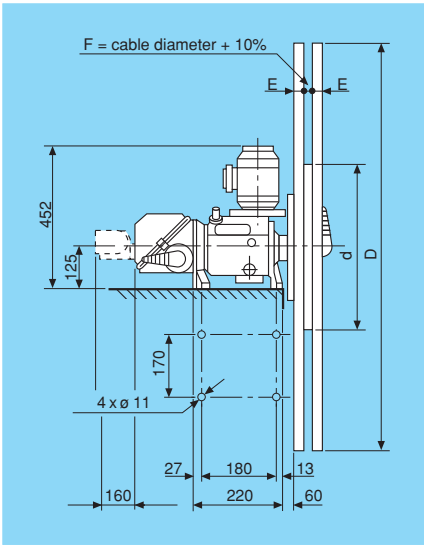

Torque unit 10.0

Reduction 1:42
Nominal torque 80 Nm
weight: 35 kg

Motor (values for 400V, 50Hz)			Flange Size 80		**Collector** 600 V, IP 55				
No. of poles/ rpm	kW	Amp	Reel speed (m/min) d=300	d=500	Type		**K 12**	**K 412**	**K 424**
4/1410	0,75	2,1	32	53	N° rings		12	4	4
6/920	0,55	1,8	21	35	Nominal amperage	Amp	30	120	240
8/700	0,18	1,0	15	26	Continuous rating	Amp	16	60	120
Motor weight: 9 Kg					Weight	Kg	9	8	TBC

Drum dimensions			Approximate	**Monospiral reel**						
D	d	E	weight (Kg)	**Type**	Capacity (metres)					
700	300	20	15	**10.0 M 307**	7	6	9	9		
900	300	20	17	**10.0 M 309**	16	14	20	18	13	10
1000	500	40	20	**10.0 M 510**	18	15	22	20	15	12
1200	500	40	24	**10.0 M 512**	31	27	36	34	25	21
1400	500	40	28	**10.0 M 514**	46	40	54	51	38	32
1600	500	40	39	**10.0 M 516**	64	56	75	71	54	46

These tables only give an indication of general capacity and size. Always ask Cavotec Specimas for a specific quotation.

Cable size		mm²	**7x 2,5**	**12x 2,5**	**4x 4**	**4x 6**	**4x 10**	**4x 16**
Outer diameter	~	mm	24	27	21	22	28	32
Amperage rating	~	Amp	24	24	33	43	60	80
Weight	~	kg	0,7	0,9	0,55	0,7	1,1	1,5

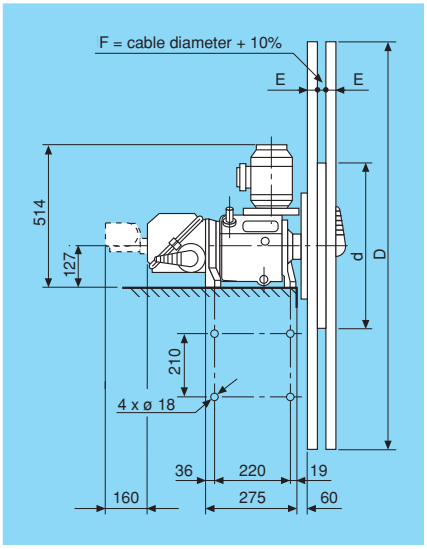

Torque unit 20.0

Reduction 1:60
Nominal torque 160 Nm
weight: 55 kg

Motor (values for 400V, 50Hz)			Flange Size 90		**Collector** 600 V, IP 55				
No. of poles/ rpm	kW	Amp	Reel speed (m/min) d=500	d=800	Type		**K24**	**K 424**	**K 440**
4/1420	1,5	3,7	37	60	N° rings		24	4	4
6/930	1,1	3,4	24	39	Nominal amperage	Amp	30	240	400
8/700	0,55	2,3	18	29	Continuous rating	Amp	16	120	200
Motor weight: 15 Kg					Weight	Kg	9	9	12

Drum dimensions			Approximate	**Monospiral reel**						
D	d	E	weight (Kg)	**Type**	Capacity (metres)					
1000	500	40	20	**20.0 M 510**	13	10	12			
1200	500	40	24	**20.0 M 512**	22	18	22			
1400	500	40	28	**20.0 M 514**	34	28	33	27		
1600	800	40	40	**20.0 M 816**	40	34	40	32	29	23
1900	800	40	52	**20.0 M 819**	64	54	64	52	47	39
2200	800	40	63	**20.0 M 822**	93	79	92	75	68	57

These tables only give an indication of general capacity and size. Always ask Cavotec Specimas for a specific quotation.

Cable size		mm²	**18x 2,5**	**24x 2,5**	**4x 16**	**4x 25**	**4x 35**	**3x50 + 3x10**
Outer diameter	~	mm	31	35,6	31,2	37,1	40,3	46,7
Amperage rating	~	Amp	14,4	12,8	83	110	137	170
Weight	~	kg	1,27	1,67	1,47	2,16	2,72	3,4

Torque unit 40.0

Reduction 1:63
Nominal torque 320 Nm
weight: 125 kg

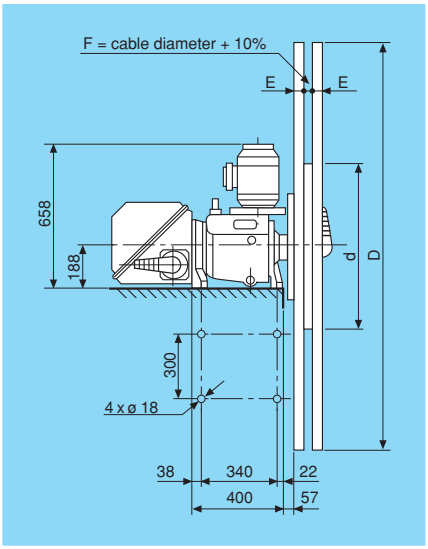

Motor (values for 400V, 50Hz)			Flange Size 100/112		**Collector** 600V, IP 55			
No. of poles/ rpm	kW	Amp	Reel speed (m/min) d=800	d=1200	Type	**K 24**	**K 440**	**K 460**
4/1430	3,0	6,9	57	86	N° rings	24	4	4
6/930	2,2	5,8	37	56	Nominal amperage Amp	30	400	600
8/690	1,5	4,6	28	42	Continuous rating Amp	16	200	300
Motor weight: 23/31 Kg					Weight Kg	9	12	35

Drum dimensions			Approximate	**Monospiral reel**						
D	d	E	weight (Kg)	**Type**	Capacity (metres)					
1400	500	40	28	**40.0 M 514**	34	28	24	19	17	15
1600	800	40	40	**40.0 M 816**	40	34	29	23	21	19
1900	800	40	52	**40.0 M 819**	64	54	47	39	34	32
2200	800	40	63	**40.0 M 822**	93	79	68	57	51	47
2500	1200	60	136	**40.0 M 1225**	109	93	81	68	61	57
2800	1200	60	148	**40.0 M 1228**	147	126	110	93	83	78

These tables only give an indication of general capacity and size.
Always ask Cavotec/Cavotec Specimas for a specific quotation.

Cable size	mm²	**18x 2,5**	**24x 2,5**	**4x 35**	**3x50 + 3x10**	**3x70 + 3x16**	**3x95 + 3x16**
Outer diameter	~ mm	31	35,6	40,3	46,7	51,4	54,2
Amperage rating	~ Amp	14,4	12,8	137	170	210	254
Weight	~ kg	1,27	1,67	2,72	3,4	4,4	5,5

Torque unit 120.0

Reduction 1:90
Nominal torque 1000 Nm
weight: 316 kg

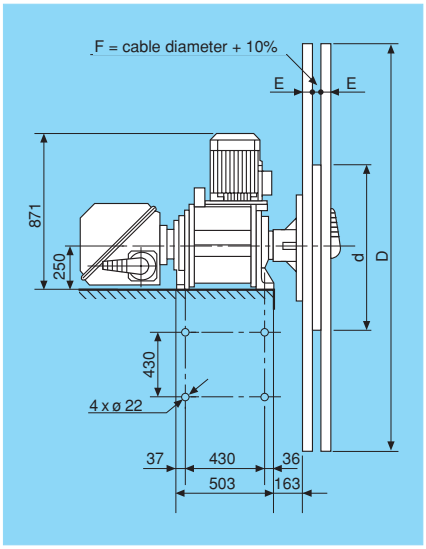

Motor (values for 400V, 50Hz)			Flange Size 132		**Collector** 1000 V, IP 55			
No. of poles/ rpm	kW	Amp	Reel speed (m/min) d=1200	d=1500	Type	**K 440**	**K 460**	**K 4121**
4/1440	7,5	16	60	75	N° rings	4	4	4
6/940	5,5	12,7	39	49	Nominal amperage Amp	400	600	1200
8/710	3,0	9	29	37	Continuous rating Amp	200	300	600
Motor weight: 50 Kg					Weight Kg	12	35	48

Drum dimensions			Approximate	**Monospiral reel**						
D	d	E	weight (Kg)	**Type**	Capacity (metres)					
2200	800	40	63	**120.0 M 822**	68	57	51	47	40	39
2500	800	40	75	**120.0 M 825**	93	78	70	65	56	54
3100	1200	60	160	**120.0 M 1231**	142	120	107	101	88	85
3800	1200	80	360	**120.0 M 1238**	230	196	176	165	144	139
4000	1500	100	380	**120.0 M 1240**	246	209	188	177	155	149
4300	1500	100	450	**120.0 M 1543**	292	249	224	211	184	178

These tables only give an indication of general capacity and size.
Always ask Cavotec/Cavotec Specimas for a specific quotation.

Cable size	mm²	**4x 35**	**3x50 + 3x10**	**3x70 + 3x16**	**3x95 + 3x16**	**3x120 + 3x25**	**3X150 + 3x25**
Outer diameter	~ mm	40,3	46,7	51,4	54,2	61,1	62,9
Amperage rating	~ Amp	137	170	210	254	296	340
Weight	~ kg	2,72	3,4	4,4	5,5	6,8	7,94

Hydrodynamic Reels — Low Voltage

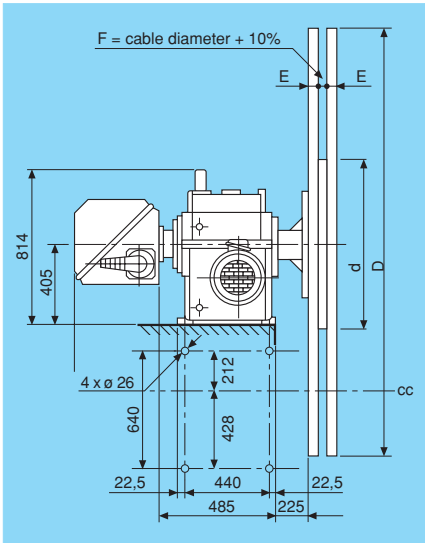

Torque unit 200.0/300.0

Reduction 1:186 / 1:237
Nominal torque 2000 / 2700 Nm
weight: 610 kg

Motor (values for 400V, 50Hz) Flange Size 132							**Collector** 1000 V, IP 55				
No. of poles/ rpm	kW	Amp	Reel speed (m/min) d=1500		d=2000		Type		**K 440**	**K460**	**K4121**
4	7,5	16,5	36	28	48	38	N° rings		4	4	4
6	5,5	12,7	23	18	31	24	Nominal amperage	Amp	400	600	1200
8	3	9	17	14	23	18	Continuous rating	Amp	200	300	600
Motor weight: 50 kg							Weight	kg	12	35	48

Drum dimensions			Approximate	**Monospiral reel**					
D	d	E	Weight Kg	**Type**	Capacity (metres)				
3500	1200	80	320	**200.0/300.0 M1235**	190	161	145	136	118	114
3800	1200	80	360	**200.0/300.0 M1238**	230	196	176	165	144	139
4300	1500	100	450	**200.0/300.0 M1543**	292	249	224	211	184	178
5000	1500	100	640	**200.0/300.0 M1550**		352	317	300	262	254
5500	2000	120	820	**200.0/300.0 M2055**			371	350	307	298
6000	2000	120	1160	**200.0/300.0 M2060**			455	430	377	365

These tables only give an indication of general capacity and size. Always ask Cavotec Specimas for a specific quotation.

Cable size		mm²	**4x 35**	**3x50 + 3x10**	**3x70 + 3x16**	**3x95 + 3x16**	**3x120 + 3x25**	**3x150 + 3x25**
Outer diameter	~	mm	40,3	46,7	51,4	54,2	61,1	62,9
Amperage rating	~	Amp	137	170	210	254	296	340
Weight	~	kg	2,72	3,4	4,4	5,5	6,8	7,94

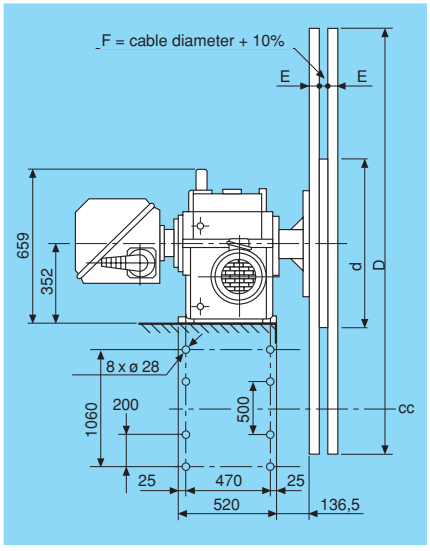

Torque unit 550.0/700.0

Reduction 1:202/ 1:256
Nominal torque 4500/5700 Nm
Weight: 1015 Kg

Motor (values for 400V, 50Hz) Flange Size 132							**Collector** 1000 V, IP 55				
No. of poles/ rpm	kW	Amp	Reel speed (m/min) d=2000		d=3000		Type		**K 440**	**K460**	**K4121**
4	7,5	16,5	44	35	67	52	N° rings		4	4	4
6	5,5	12,7	29	23	43	34	Nominal amperage	Amp	400	600	1200
8	3	9	22	17	33	26	Continuous rating	Amp	200	300	600
Motor weight : 50 kg						Weight	kg	12	35	48	

Drum dimensions			Approximate	**Monospiral reel**					
D	d	E	Weight kg	**Type**	Capacity (metres)				
6000	2000	100	1160	**550.0/700.0 M2060**	589	504	455	430	377	365
6500	2500	120	1550	**550.0/700.0 M2560**	667	571	516	488	429	415
6500	2500	120	1550	**550.0/700.0 M2565**	667	571	516	488	429	415
7000	2500	120	2000	**550.0/700.0 M2570**		681	615	581	511	496
7300	2500	150	2500	**550.0/700.0 M2573**			678	641	564	547
7300	3000	150	2500	**550.0/700.0 M3073**			640	605	533	516

These tables only give an indication of general capacity and size. Always ask Cavotec Specimas for a specific quotation.

Cable size		mm²	**4x 35**	**3x50 + 3x10**	**3x70 + 3x16**	**3x95 + 3x16**	**3x120 + 3x25**	**3x150 + 3x25**
Outer diameter	~	mm	40,3	46,7	51,4	54,2	61,1	62,9
Amperage rating	~	Amp	137	170	210	254	296	340
Weight	~	kg	2,72	3,4	4,4	5,5	6,8	7,94

Hydrodynamic Reels — Medium Voltage

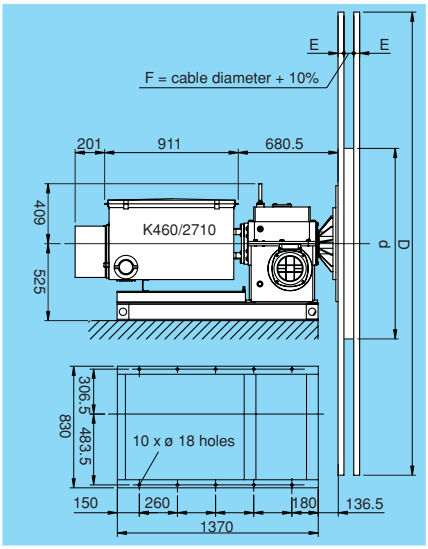

Torque unit 200.0/300.0

Reduction 1:186 / 1:237
Nominal torque 2000 / 2700 Nm
weight: 610 kg

Motor (values for 400V, 50Hz)			Flange Size 132				**Collector** MV, IP 55				
No. of poles/ rpm	kW	Amp	Reel speed (m/min) d=1500		d=2000		Type		**K460/2710**	**K460/2713**	**K460/4522**
4	7,5	16,5	36	28	48	38	Nominal voltage	kV	6	10	20
6	5,5	12,7	23	18	31	24	Max. voltage	kV	7,2	12	24
8	3	9	17	14	23	18	N° rings		4	4	4
							Nominal amperage	Amp	600	600	600
							Continuous rating	Amp	300	300	300
Motor weight: 50 kg							Weight (basement included)	kg	190	210	350

Drum dimensions			Approximate	**Monospiral reel**			
D	d	E	Weight kg	**Type**	Capacity (metres)		
3500	1200	80	320	**200.0/300.0 M1235**	145 98	136 96	104 94
3800	1200	80	360	**200.0/300.0 M1238**	176 120	165 118	127 115
4300	1500	100	450	**200.0/300.0 M1543**	224 154	210 151	163 147
5000	1500	100	640	**200.0/300.0 M1550**	318 219	299 216	233 211
5500	2000	120	820	**200.0/300.0 M2055**	372 258	350 254	273 248
6000	2000	120	1160	**200.0/300.0 M2060**	456 317	429 312	336 305

These tables only give an indication of general capacity and size. Always ask Cavotec Specimas for a specific quotation.

Cable size		mm²	**3x35 + 3x10**	**3x120 + 3x25**	**3x25 + 3x10**	**3x95 + 3x25**	**3x35 + 3x10**	**3x50 + 3x10**
Outer diameter	~	mm	40,3	46,7	51,4	54,2	61,1	62,9
Amperage rating	~	Amp	137	170	210	254	296	340
Weight	~	kg	2,72	3,4	4,4	5,5	6,8	7,94

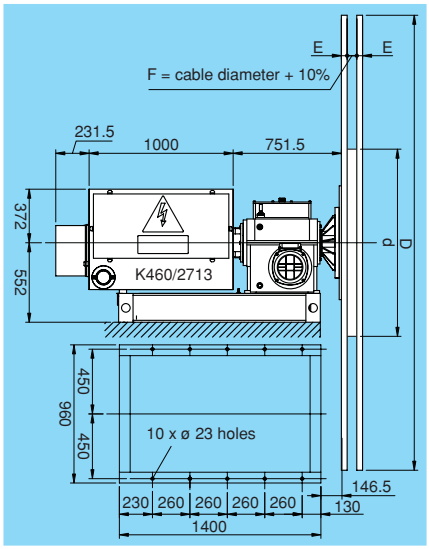

Torque unit 550.0/700.0

Reduction 1:202; 1:256
Nominal torque 4500Nm; 5700 Nm
Weight: 1015 kg

Motor (values for 400V, 50Hz)			Flange Size 132				**Collector** MV, IP 55				
No. of poles/ rpm	kW	Amp	Reel speed (m/min) d=2000		d=3000		Type		**K460/2710**	**K460/2713**	**K460/4522**
4	7,5	16,5	44	35	67	52	Nominal voltage	kV	6	10	20
6	5,5	12,7	29	23	43	34	Max. voltage	kV	7,2	12	24
8	3	9	22	17	33	26	N° rings		4	4	4
							Nominal amperage	Amp	600	600	600
							Continuous rating	Amp	300	300	300
Motor weight: 50 kg							Weight (basement included)	kg	190	210	350

Drum dimensions			Approximate	**Monospiral reel**			
D	d	E	Weight kg	**Type**	Capacity (metres)		
6000	2000	100	1160	**550.0/700.0 M2060**	456 317	429 312	336 305
6500	2500	120	1550	**550.0/700.0 M2560**	517 361	487 355	382 347
6500	2500	120	1550	**550.0/700.0 M2565**	517 361	487 355	382 347
7000	2500	150	2000	**550.0/700.0 M2570**	616 431	580 424	456 414
7300	2500	150	2500	**550.0/700.0 M2573**	680 476	640 468	503 457
7300	3000	150	2500	**550.0/700.0 M3073**	641 449	604 443	475 432

These tables only give an indication of general capacity and size. Always ask Cavotec Specimas for a specific quotation.

Cable size		mm²	**3x35 + 3x10**	**3x120 + 3x25**	**3x25 + 3x10**	**3x95 + 3x25**	**3x35 + 3x10**	**3x50 + 3x10**
Outer diameter	~	mm	51,3	71,6	54,3	72,6	68	74,2
Amperage rating	~	Amp	130	281	105	240	137	172
Weight	~	kg	3,54	8,21	3,38	7,14	5,44	6,22

Cavotec Pull & Store System

Cavotec Specimas Pull & Store reels are today working all over the world in about 1000 installations.
The system has provided a simple solution to the problem of cable over-tensioning in high lift applications.
The motorised Pull reel lifts the cable with constant reeling radius, while the Store reel collects the cable on the main drum.
By splitting the work to Pull and to Store the cable on two separate torque units – each with even torque output – Cavotec Specimas introduced in 1977 a simple system for cable protection. The system becomes intrinsically safe, featuring an integrated over tension limitation, without the need for more sophisticated and sensitive torque control systems.

Standard Pull & Store configuration

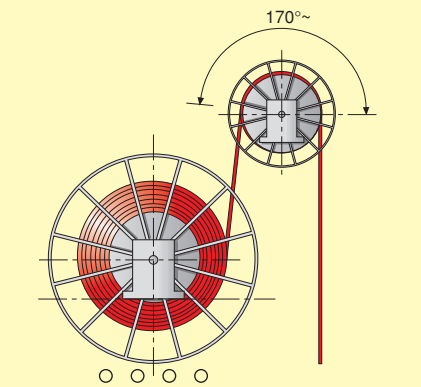

Typical installation

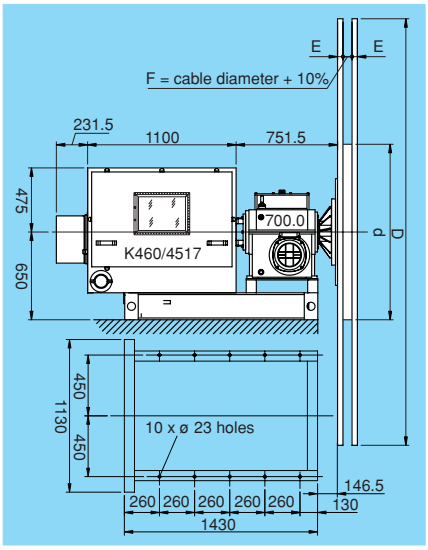

Store reel

	Collector MV, IP 55			
	Nominal voltage	6kV	10kV	20kV
	N° rings	4	4	4
	Nominal amperage Amp	600	600	600
	Continuous rating Amp	300	300	300

Drum dimensions D	d	E	Approximate weight (Kg)	Store reel Type	Reeling Capacity (metres)					
6000	2000	100	1160	**300.0 M 2060**	378	347	365	341	336	306
6500	2000	120	1150	**300.0 M 2065**	454	417	439	410	404	368
7000	2500	150	2000	**550.0 M 2570**	512	471	495	463	456	416
7500	2500	150	2500	**550.0 M 2573**	565	519	546	511	503	459
7300	3000	150	2500	**700.0 M 3073**	534	491	516	483	475	434
8500	4000	180	4000	**700.0 M 4085**	686	631	663	621	612	559

These tables only give an indication of general capacity and size.
Always ask Cavotec Specimas for a specific quotation.

Cable size	mm²	3x70 + 3x16	3x95 + 3x16	3x50 + 3x10	3x70 + 3x16	3x35 + 3x10	3x50 + 3x10
Outer diameter	~ mm	61	66	63	67	68	74
Amperage rating	~ Amp	220	268	178	220	143	178
Weight	~ kg	5,6	6,6	4,9	5,9	5,4	6,2

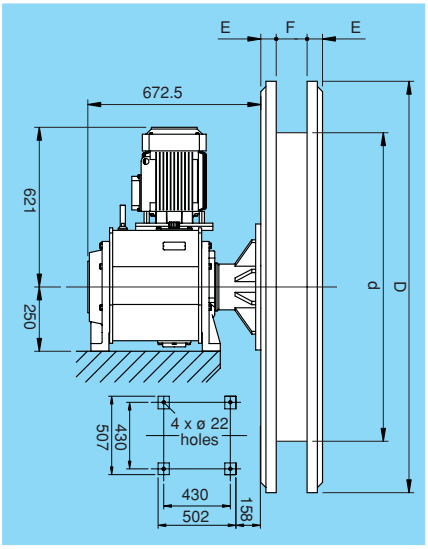

Pull reel

Drum dimensions D	d	E	F	Approximate weight (Kg)	Pull reel Type	Lifting Capacity (metres)					
1600	1200	40	120	50	**40.0 P 1216**	7	6	8	6	7	6
1900	1500	50	120	58	**120.0 P 1519**	17	14	20	16	18	15
2200	1800	50	120	65	**120.0 P 1822**	14	12	16	13	15	13
2400	2000	60	120	100	**200.0 P 2024**	26	22	30	24	27	23

** The Pull & Store can also be driven by the CTC drive.*

Comparison of cable tensions between Monospiral and Pull & Store reels

If the cable tension is not monitored and controlled it will vary in a reel application mainly due to the characteristics of the clutch, the reeling diameter and the inertia of the drum and cable. Below follows a comparison of Monospiral and Pull & Store application using the hydrodynamic torque units. The data used are for a normal application on a ship-to-shore crane.

Application data

Type of crane	Ship-to-shore crane
Cable	Panzerflex 11 kV
	diameter 58 mm
	weight 5,1 kg
Cable length	460 m
Speed	46 m/min
Acceleration time	5 s
Height of installation	20 m
Duty cycle (travel)	40 % ED

Pull & Store reels in action at Everglades Terminal, USA

Monospiral reel

The diagram to the right shows the cable tension as a function of the number of turns of the cable on the drum in a monospiral application. In a monospiral reel with a constant drive the cable tension increases as the reeling diameter decreases. This varies also depending on the reeling or unreeling mode. As illustrated here it is not unsual that the maximum tension allowed on the cable is exceeded in a monospiral application - especially when there is big ratio between drum inner and outer diameter is large.

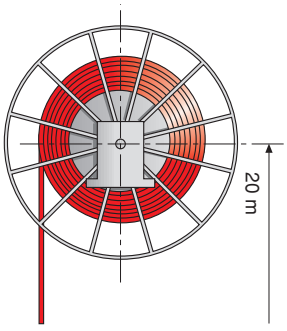

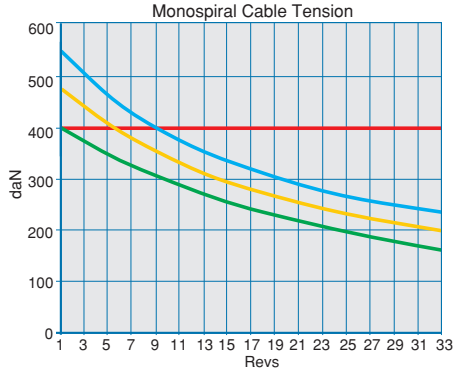

Pull & Store reel

The diagram to the right shows the cable tension as a function of the number of turns of the cable on the drum in a Pull & Store system based on the same data as above. In the Pull & Store reel, the cable tension is limited mainly by the fact that the Pull reel lifts the cable on a constant reeling radius. It varies also depending on the reeling or unreeling mode and due to inertia of drum and cable. Through the use of a Pull & Store configuration it is possible to limit the maximum tension of the cable within the allowed limits, as shown in the diagram, without the need of sophisicated torque control.

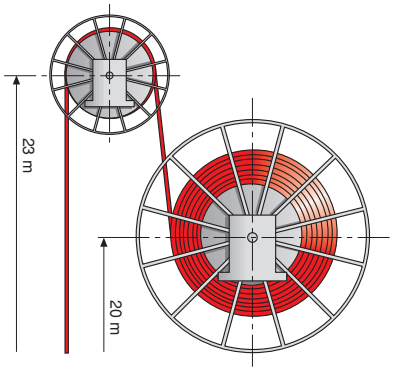

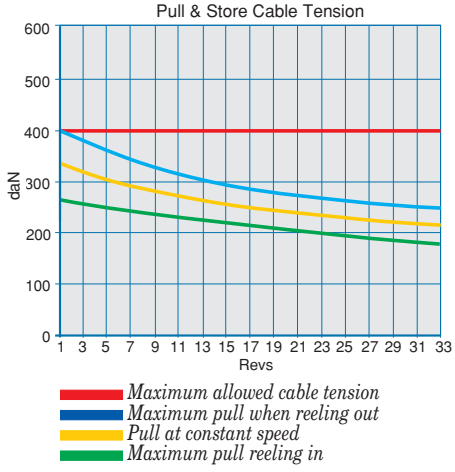

Cavotec Torque Motor System

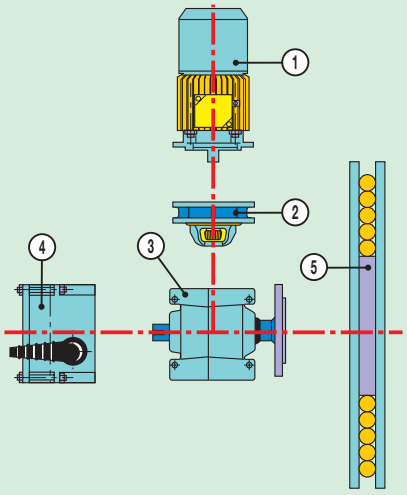

1 - Motor
Self-braking torque motor

2 - Pre-reducer
Mounted between torque motor and main gearbox to adapt motor torque and speed to required values.

3 - Gearbox
This is the basic component of the Cavotec Specimas system.
It adapts motor speed and torque to the requirement of the applocation

4 - Collector
The purpose of the slipring assembly is to allow the reeling of the cable onto the drum without torsional strain.
Cavotec Specimas slipring assemblies are monobloc units, they are self-contained and fitted directly onto the torque unit shaft.

5 - Drum
Cavotec Specimas drums are of modular design, using standard components, offering a wide range of selections. Drums are manufactured from steel tubing and surface treated to withstand tropical and corrosive marine conditions.
Drums with small diameters are manufactured from sheet and are welded.
Assembly bolts are in stainless steel.

The Cavotec Specimas torque motor for cable reels has been designed to provide a nearly constant torque in reeling and unreeling mode. The system is also designed for continuous duty. The resulting mechanical cable tension could be compared to a hydrodynamic system. This has been obtained by using a torque motor with a very flat torque/slip curve. The motors are used up to maximum of ± 400 rpm and, within this range, the torque fluctuation is approximatley 10%. Besides the motor characteristics, the gearbox efficiency also influence the traction to which the cable is submitted. The Cavotec Specimas T-series gearboxes are designed with this in mind. They incorporate a monoshaft planetary gear which makes them highly reversable. The torque motors are equipped with an electro-magnetic brake and are servo-ventilated. The standard protect class is IP55 and is suitable for environment temperatures up to 40°C. Special ventilation and motor insulation are supplied for higher temperature ranges.

Torque/slip diagram

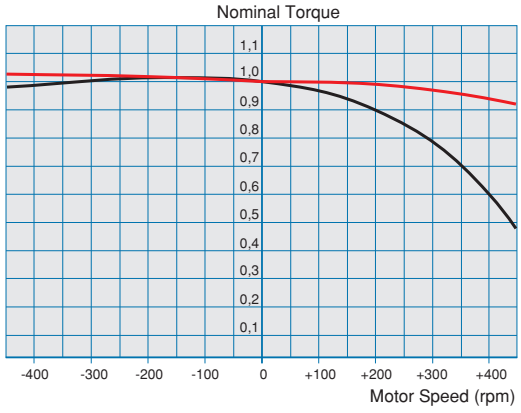

Cavotec Specimas torque motor
Conventional torque motor

Typical torque motor reel application in a vertical cable reel installation in a steel mill.

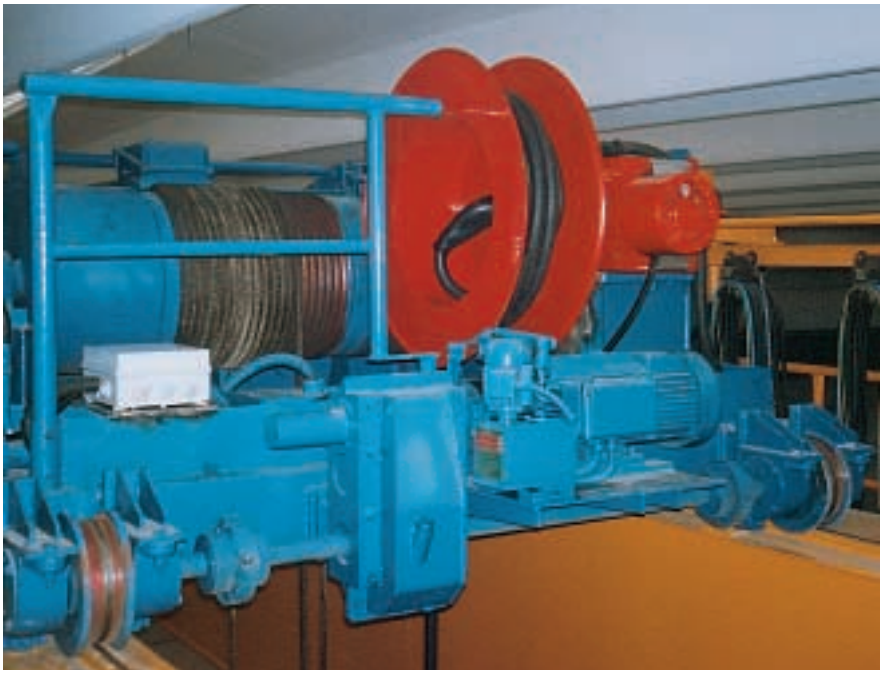

REELS020

Reducer T2 with torque motor

Nominal torque 109 Nm

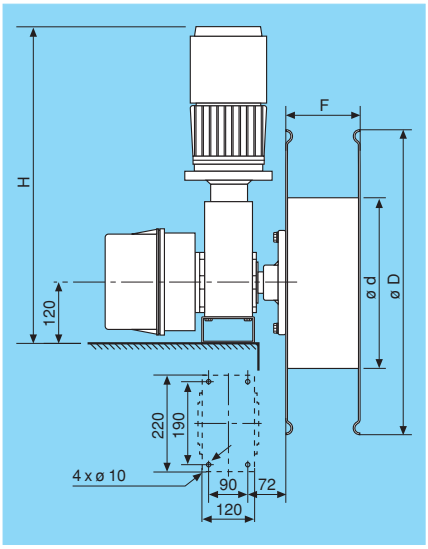

Reducer T2			Reeling speed (m/min)		
Type	Reduction	Approximate Weight (kg)	d=300	d=400	d=500
T2.10	10,3	20	36	48	61
T2.14	14,1	20	27	35	45
T2.23	23,1	20	16	22	27

collector 600 V, IP55			
Type	**KA4512**	**KA0204**	**KA0304**
N° rings	11+P	3+P	3+P
Nominal amperage Amp	25	50	90
Continuous rating Amp			
Weight (kg)	4	3,5	5

Torque motors 400V (±5%) - 50 Hz (±400 rpm)					Drum
Type	Nominal torque Nm	Approximate Weight (kg)	Amp	H	H1 (1)
N2	2	14	0,63	703	
N3	3	20	0,84	750	
N5	5	28	1,28	785	
N7	7	35	2,72	860	

Type	dimension D	d	F	Approx. Weight(kg)	Capacity (metres)					
TF306	600	300	100	15	29	25	30	28		
TF306	600	300	150	16	43	37	45	42		
TF306	600	300	200	18	58	50	61	56		
TF408	800	400	100	25	52	44	55	51	42	35
TF408	800	400	150	28	78	66	82	76	64	54
TF408	800	400	200	33	104	89	110	102	99	84

These tables only give an indication of general capacity and size.
Always ask Cavotec Specimas for a specific quotation.

Cable size	mmq	**7x 2,5**	**12x 2,5**	**4x 4**	**4x 6**	**4x 10**	**4x 16**
Outer diameter	~ mm	21,2	24,8	20	21,5	25,5	30
Amperage rating	~ Amp	24	24	33	43	60	80
Weight	~ kg	0,7	0,9	0,55	0,68	1,03	1,47

Reducer NT3 with torque motor

Nominal torque 290 Nm

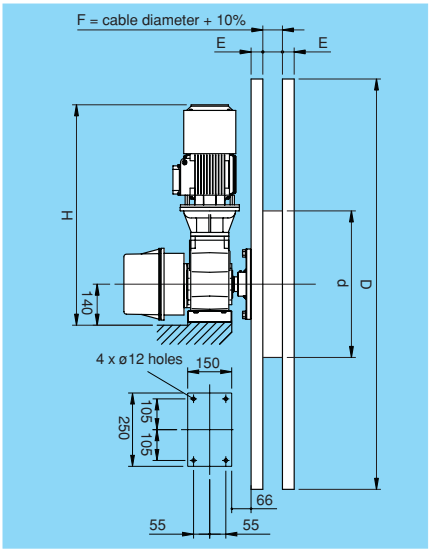

Reducer T3N			Reeling speed (m/min)	
Type	Reduction	Approximate Weight (kg)	d=300	d=500
NT3.09	9,3	24	40	67
NT3.14	13,6	24	27	46
NT3.23	22,8	24	16	27
NT3.23	29,3	24	12	21

collector 600 V, IP55			
Type	**K12**	**K412**	**K424**
N° rings	12	4	4
Nominal amperage Amp	30	120	240
Continuous rating Amp	16	60	120
Weight kg	9	7	8

Torque motors 400V (±5%) - 50 Hz (±400 rpm)					Drum
Type	Nominal torque Nm	Approximate Weight (kg)	Amp	H	H1 (1)
N2	2	17	0,63	575	625
N3	3	18	0,84	620	670
N5	5	26	1,28	655	705
N6	6	26	1,71	655	705
N7	7	30	2,72	730	780
N8.6	8,6	38	3,32	730	780
N10	10	45	3,63	855	905

Type	dimension D	d	E	Approx. Weight(kg)	Capacity (metres)					
M307	700	300	20	15	7	6	9	9		
M309	900	300	20	17	16	14	20	18	13	10
M510	1000	500	40	20	18	15	22	20	15	12
M512	1200	500	40	24	31	27	36	34	25	21
M514	1400	500	40	28	46	40	54	51	38	32
M516	1600	500	40	39	64	56	75	71	54	46

These tables only give an indication of general capacity and size.
Always ask Cavotec Specimas for a specific quotation.

Cable size	mm^2	**7x 2,5**	**12x 2,5**	**4x 4**	**4x 6**	**4x 10**	**4x 16**
Outer diameter	~ mm	24	27	21	22	28	32
Amperage rating	~ Amp	24	24	33	43	60	80
Weight	~ kg	0,7	0,9	0,55	0,7	1,1	1,5
Drum width F	mm	26	29	23	24	30	35

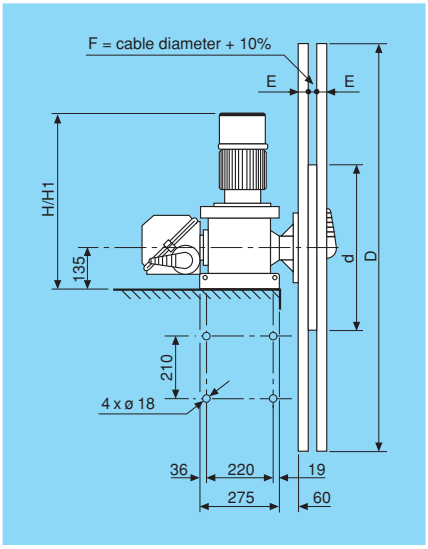

Reducer T4 with torque motor

Nominal torque 400 Nm

Reducer T4			Reel speed (m/min)		collector 600 V, IP55			
Type	Reduction	Approximate Weight (kg)	d=500	d=800	Type		K24	K424	K440
T4.0	15	75	41	66	N° rings		24	4	4
T4.1 (1)	23	91,5	27	43	Nominal amperage	Amp	30	240	400
T4.2 (1)	30	91,5	20	33	Continuous rating	Amp	20	120	200
T4.3 (1)	38	91,5	16	26	Weight	kg	9	9	12

Torque motors 400V (±5%) - 50 Hz (± 400 rpm)					Drum											
Type	Nominal torque Nm	Approximate Weight (kg)	Amp	H	H1 (1)	Type	dimension D	d	E	Approx. Weight (kg)	Capacity (metres)					
N5	5	26	1,28	703	780	**M510**	1000	500	40	20	13	10	12			
N6	6	26	1,71	703	780	**M512**	1200	500	40	24	22	18	22			
N7	7	30	2,72	778	855	**M514**	1400	500	40	28	34	28	33	27		
N8,6	8,6	38	3,32	778	855	**M816**	1600	800	40	40	40	34	40	32	29	23
N10	10	45	3,63	904	980	**M819**	1900	800	40	52	64	54	64	52	47	39
N12	12	65	4,59	985	1062	**M822**	2200	800	40	63	93	79	92	75	68	57
N15	15	75	4,75	1023	1100	**M825**	2500	800	60	75	126	108	125	103	93	78

(1) with pre-reducer

These tables only give an indication of general capacity and size. Always ask Cavotec Specimas for a specific quotation.

Cable size	mm²	18x 2,5	24x 2,5	4x 16	4x 25	4x 35	3x50 + 3x10
Outer diameter	~ mm	31	35,6	31,2	37,1	40,3	46,7
Amperage rating	~ Amp	14,4	12,8	83	110	137	170
Weight	~ kg	1,27	1,67	1,47	2,16	2,72	3,4
Drum width F	mm	34	39	34	40	44	51

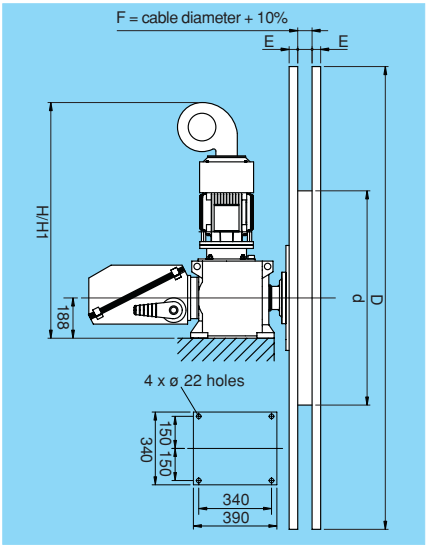

Reducer T5 with torque motor

Nominal torque 1000 Nm

Reducer T5			Reel speed (m/min)			collector 600 V, IP55			
Type	Reduction	Approximate Weight (kg)	d=500	d=800	d=1200	Type	K24	K440	K460
T5.0	21	193,0	30	48		N° rings	24	4	4
T5.1	32	207,5	20	32	48	Nominal amperage Amp	30	400	600
T5.2	43	207,5	15	24	36	Continuos rating Amp	20	200	300
T5.3	53	207,5	12	19	28				
						Weight (kg)	9	12	35

Torque motors 400V (±5%) - 50 Hz (±400 rpm)					Drum											
Type	Nominal torque Nm	Approximate Weight (kg)	Amp	H	H1 (1)	Type	dimension D	d	E	Approx. Weight(kg)	Capacity (metres)					
N5	3	26	1,28	781	853	**M514**	1400	500	40	28	34	28	24			
N7	5	30	2,72	876	948	**M816**	1600	800	40	40	40	34	29	23		
N8,6	7	38	3,32	876	948	**M819**	1900	800	40	52	64	54	47	39	34	
N10	10	45	3,63	876	948	**M822**	2200	800	40	63	93	79	68	67	51	47
N12	12	65	4,59			**M1225**	2500	1200	60	136	109	93	81	68	61	57
N15	15	75	4,75			**M1228**	2800	1200	60	148	147	126	110	93	83	78
						M1231	3100	1200	60	160	189	163	142	120	107	101

These tables only give an indication of general capacity and size. Always ask Cavotec Specimas for a specific quotation.

Cable size	mm²	18x 2,5	24x 2,5	4x 35	3x50 3x10	3x70 3x16	3x95 3x16
Outer diameter	~ mm	30,2	33,6	39	41	49,4	56,4
Amperage rating	~ Amp	14,4	12,8	137	170	210	254
Weight	~ kg	1,27	1,68	2,72	3,4	4,7	6
Drum width	mm	35	38	44	46	54	60

Cavotec Torque Control (CTC)

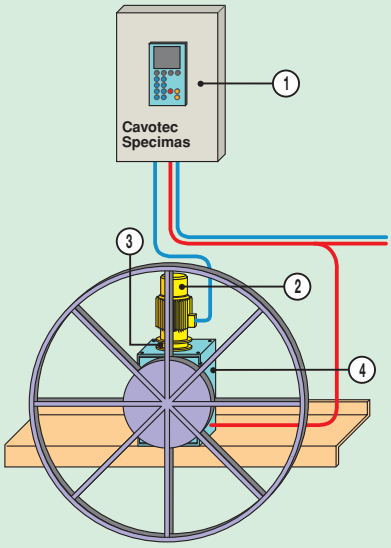

1 - CTC drive.

2 - Standard squirrel cage electric motor. One or more motors can be used in parallel.

3 - Pre-reducer and electromagnetic holding brake.

4 - Main gear-box.

The Cavotec Specimas cable reel with CTC drive is the result of a technical cooperation between drive manufacturers and Cavotec Specimas. The CTC system achieves precise speed and torque control of standard maintenance-free squirrel cage motors. A slipping device between motor and gear-box is not needed.
The Cavotec Specimas CTC driven cable reel allows an almost constant pull on the cable. In fact, by following the torque reference signal (see fig.1) computed on the basis of reeling variables – such as cable weight, reeled cable on the drum, acceleration or deceleration of the crane, position on the track – the CTC minimizes the pull on the cable.

Cavotec Specimas has also chosen to use oversized, not force ventilated, motors for reliability and for simplicity in system layout.
The result is a longer cable life and an increased reliability of the cable reel system.

Fig. 1 – Cavotec Torque Control, CTC drive

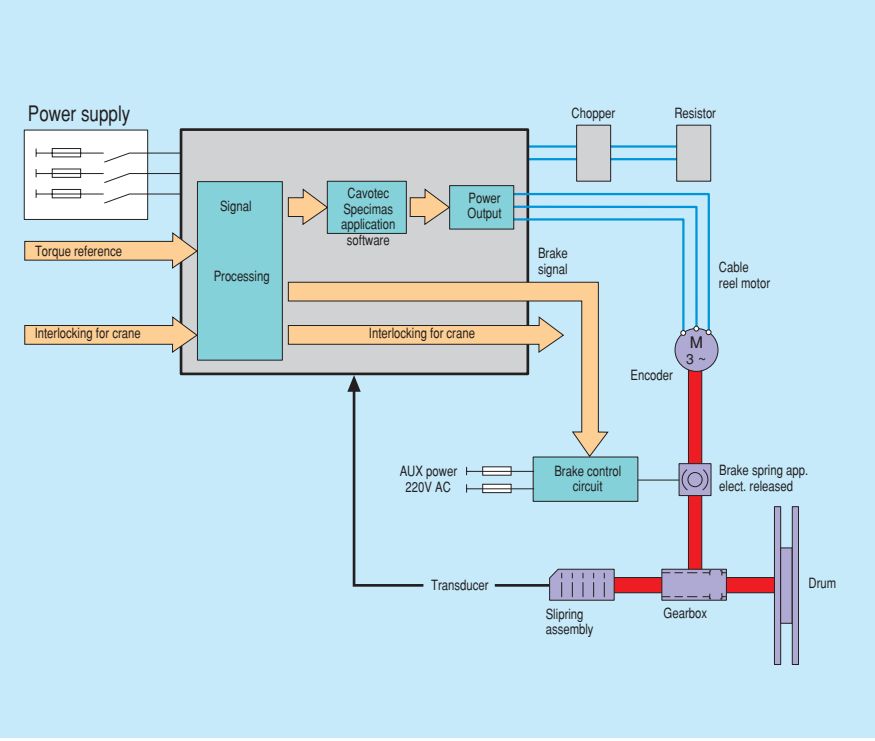

Reducer T5 with CTC

Nominal torque 1000 Nm

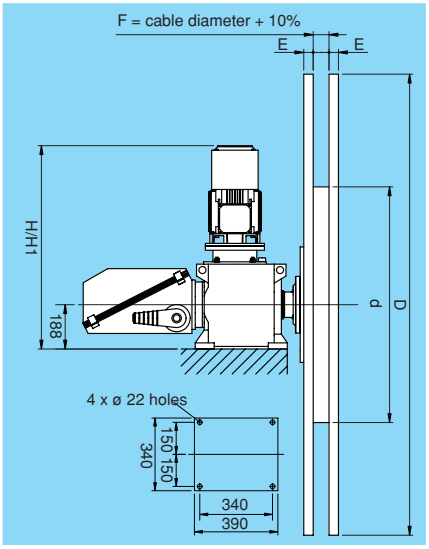

Reducer T5			Reeling speed (m/min)		
Type	Reduction	Approx. W. (kg)	d=500	d=800	d=1200
T5.0	21	193,0	104	166	249
T5.1	32	207,5	68	108	162
T5.2	42	207,5	52	83	124
T5.3	53	207,5	41	65	97

collector 750 V, IP55				
Type		**K24**	**K440**	**K460**
N° rings		24	4	4
Nominal amperage	Amp	30	400	600
Continuous rating	Amp	16	200	300
Weight	kg	9	12	35

Torque motors 400V (±5%) 50Hz (±1400rpm)						
Motor selection	Nominal torque Nm	Motor weight (kg)	CTC power	CTC output current	H	H1 (1)
1x3kW	20	20			759	831
1x4kW	25	31			773	845
2x3kW	2x20	2x20	7,5	18	759	831
2x4kW	2x25	2x31	11	24	773	845

Drum												
Type	dimension				Approx.	Capacity (metres)						
	D	d	E	W. (kg)								
M514	1400	500	40	20	34	28	24					
M816	1600	800	40	40	40	34	29	23				
M819	1900	800	40	52	64	54	47	39	34			
M822	2200	800	40	63	93	79	68	67	51	47		
M1225	2500	1200	60	136	109	93	81	68	61	57		
M1228	2800	1200	60	148	147	126	110	93	83	78		
M1231	3100	1200	60	160	189	163	142	120	107	101		

Cable size		mm²	18x 2,5	24x 2,5	4x 35	3x50 + 3x10	3x70 + 3x16	3x95 + 3x16
Outer diameter	~	mm	30,2	33,6	39	44,9	49,4	56,4
Amperage rating	~	Amp	14,4	18,8	137	170	210	254
Weight	~	kg	1,27	1,68	2,72	3,68	4,70	6,00
Drum width F		mm	35	38	44	50	55	61

These tables only give an indication of general capacity and size. Always ask Cavotec Specimas for a specific quotation.

Reducer T6 (600) with CTC

Nominal torque 2400 Nm

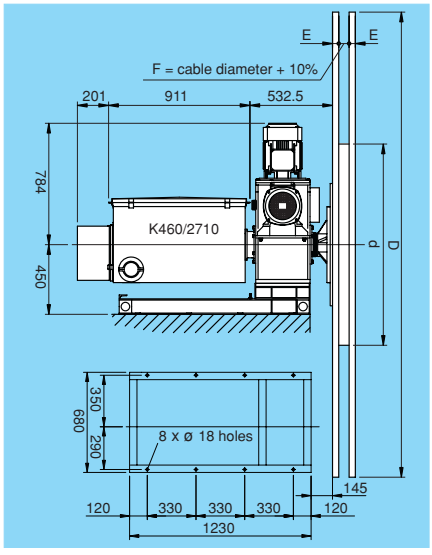

Reducer T6			Reeling speed (m/min)		
Type	Reduction	Approx. W. (kg)	d=1500	d=2000	d=2500
T6.0	33	350	200		
T6.1	46	364,5	143	190	
T6.2	57	364,5	115	153	191

collector 750 V, IP55				
Type		**K460/2710**	**K460/2713**	**K460/2715**
Nominal voltage		6	10	15
Max. voltage		7,2	12	18
N° rings		4	4	4
Nominal amperage	Amp	600	600	6200
Continuous rating	Amp	300	300	300
Weight		190	210	270
Shaft height	A	450	450	555

Torque motors 400V (±5%) 50Hz (±1400rpm)					
Motor selection	Nominal torque Nm	Motor weight	CTC Power	CTC Output Current	H
1x7,5kW	50	50	7,5	18	891
1x9kW	60	62	11	24	891
2x7,5kW	2x50	2x50	15	32	891
2x9kW	2x60	2x62	18,5	42	891

Drum												
Type	dimension				Approx.	Capacity (metres)						
	D	d	E	W. (kg)								
M1546	4600	1500	100	530	263	180	247	178	208	189		
M1550	5000	1500	120	640	318	219	299	216	299	216		
M2046	4600	2000	100	530	240	165	225	163	191	173		
M2050	5000	2000	120	650	295	204	278	201	235	214		
M2055	5500	2000	120	820	372	258	350	274	297	270		
M2060	6000	2000	120	1160	456	317	429	312	364	332		
M2560	6000	2500	120	1200	425	296	400	292	340	310		

Cable size		mm²	3x35 + 3x10	3x120 + 3x25	3x25 + 3x10	3x95 + 3x16	3x25 + 3x10	3x70 + 3x16
Outer diameter	~	mm	53,2	72,1	56,7	72,5	61,1	72,9
Amperage rating	~	Amp	130	281	105	240	110	210
Weight	~	kg	3,74	8,47	3,9	7,55	4,39	7,08
Drum width F		mm	58	77	61	77	66	77

These tables only give an indication of general capacity and size. Always ask Cavotec Specimas for a specific quotation.

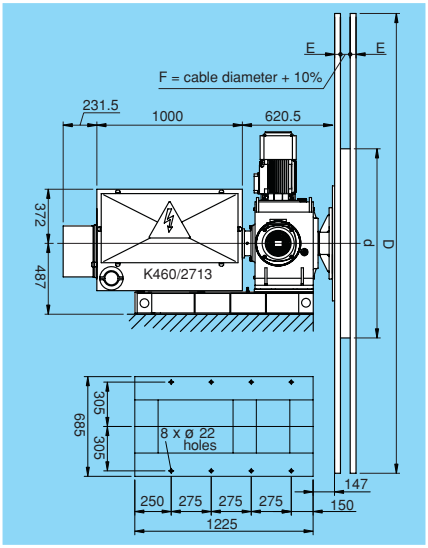

Reducer T7 with CTC

Nominal torque 4000 Nm

Reducer T7			Reeling speed (m/min)		
Type	Reduction	Approx. W. (kg)	d=1500	d=2000	d=2500
T7.0	30	450	227		
T7.1 (1)	45	470	151	202	
T7.2 (1)	60	470	113	151	189

collector MV, IP55				
Type		**K460/2710**	**K460/2713**	**K460/4517**
Nominal voltage	kV	6	10	15
Max. voltage	kV	7,2	12	18
N° rings		4	4	4
Nominal amperage	Amp	600	600	600
Continuous rating	Amp	300	300	300
Weight (basement included)	kg	190	210	270
Shaft height	A	450	450	555

Motor 400 V - Direct Torque Controller 380 V						
Motor selection	Nominal torque Nm	Motor weight	DTC Power (kW)	DTC Output Current	H	H1 (1)
1x5,5 kW	37	40	5,5	15	845	925
1x7,5 kW	50	50	7,5	18	845	925
1x9 kW	60	62	11	24	845	
2x5,5 kW	2x37	2x40	11	24	845	

(1) with pre-reducer

Drum											
Type	dimension D	d	E	Approx. W. (kg)	Capacity (metres)						
M1546	4600	1500	100	530	263	180	247	178	208	189
M1550	5000	1500	120	640	318	219	299	216	253	230
M2046	4600	2000	100	530	240	165	225	163	191	173
M2050	5000	2000	120	650	295	204	278	201	235	214
M2055	5500	2000	120	820	372	258	350	254	297	270
M2060	6000	2000	120	1160	456	317	429	312	364	332
M2560	6000	2500	120	1200	425	296	400	292	340	310

These tables only give an indication of general capacity and size.
Always ask Cavotec Specimas for a specific quotation.

Cable size	mm²	**3x35 + 3x10**	**3x120 + 3x25**	**3x25 + 3x10**	**3x95 + 3x16**	**3x25 + 3x10**	**3x70 + 3x16**
Outer diameter	~ mm	51,3	71,6	54,3	72,6	63,1	68,7
Amperage rating	~ Amp	130	281	105	240	110	210
Weight	~ kg	3,54	8,21	3,38	7,14	4,34	5,56
Drum width F	mm	55	75	58	76	67	72

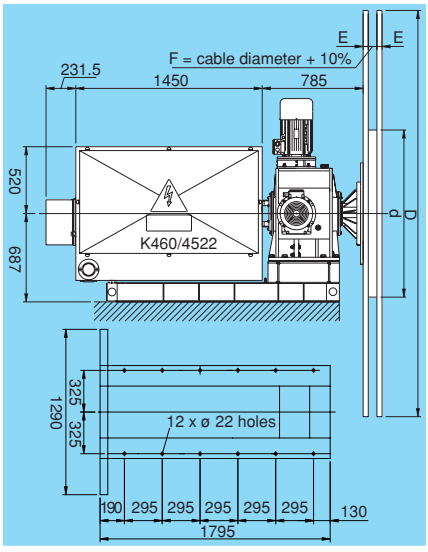

Reducer T8 with CTC

Nominal torque 6000 Nm

Reducer T8			Reeling speed (m/min)			
Type	Reduction	Approx. W. (Kg)	d=1500	d=2000	d=2500	d=3000
T8.0	34	950	200			
T8.1 (1)	51	1000	133	178	223	
T8.2 (1)	68	1000	100	133	167	200

collector MV, IP55				
Type		**K460/2713**	**K460/4517**	**K460/4522**
Nominal voltage	kV	10	15	20
Max. voltage	kV	12	18	24
N° rings		4	4	4
Nominal amperage	Amp	600	600	600
Continuous rating	Amp	300	300	300
Weight	Kg	210	270	350
Shaft height	A	522	600	670

Motor 400 V - Direct Torque Controller 380 V						
Motor selection	Nominal torque Nm	Motor weight	DTC Power (Kw)	DTC Output Current	H	H1 (1)
1x7,5Kw	50	50	7,5	18	920	1005
1x9 Kw	60	62	11	24	920	1005
2x7,5Kw	2x50	2x50	15	32	920	
2x9 Kw	2x60	2x62	18,5	41	920	
3x7,5Kw	3x50	3x50	22	47	920	

(1) with prereducer

Drum											
Type	dimension D	d	E	Approx. W. (kg)	Capacity (metres)						
M1550	5000	1500	120	640	299	216	253	209	233	211
M2046	4600	2000	100	530	225	163	191	157	175	159
M2050	5000	2000	120	650	278	201	235	194	216	196
M2055	5500	2000	120	820	350	254	297	246	273	248
M2060	6000	2000	120	1160	429	312	364	302	336	305
M2560	6000	2500	120	1200	400	292	340	282	313	285
M2573	7300	2500	150	2500	640	468	545	543	503	457
M3073	7300	3000	150	2500	604	443	515	429	475	432

These tables only give an indication of general capacity and size.
Always ask Cavotec Specimas for a specific quotation.

Cable size	mm²	**3x25 + 3x10**	**3x92 + 3x25**	**3x25 + 3x10**	**3x70 + 3x16**	**3x35 + 3x10**	**3x50 + 3x10**
Outer diameter	~ mm	54,3	72,6	63,1	74,8	68	74,2
Amperage rating	~ Amp	105	240	110	210	137	172
Weight	~ kg	3,38	7,14	4,34	5,56	5,44	6,22
Drum width F	mm	58	76	67	78	72	78


SWL: UNDER SPRE
SWL: UNDER CARGO

Cavotec Spreader Reels

Container crane spreaders have a requirement for both electrical power and control signals.
These are typically supplied via a suspended multi-core electrical cable. This cable has historically been handled by a basket mounted on the spreader headblock. However the basket is not suitable for the higher lifting speeds of modern day cranes; this lead to the development of the spreader reel.

Cavotec Specimas spreader reels have been specifically developed for high speed, high duty container crane spreader cable applications.
They are typically mounted on the trolley, and there are three versions available to accommodate a wide range of space envelopes and application parameters.

For all the spreader reel versions described above, cable tension control is achieved through the use of a CTC drive system. Control systems of varying sophistication are available to accommodate most applications.
Spreader reels are typically supplied with a plug and socket to facilitate quick cable replacement.
Heavy-duty collectors provide long-term reliability with minimal maintenance requirements.

On the following page we show some examples of possible spreader reel configurations. Please note that these are only examples for illustrational purposes. For exact information please contact Cavotec Specimas or your local Cavotec company.

A Cavotec Specimas Spreader Reel in action.

Monospiral Spreader Reel

The Monospiral Spreader Reel is the simplest and most economical version, consisting of a monospiral drum mounted directly onto a reducer as shown in the adjacent figure. Drums can be made from hot-dip galvanised mild steel or stainless steel.

Reel version	Monospiral
Type code	T5.0.CTC (2x3kW).6 VM719-35G KV406/32/FCi/R
Cable type	Gore 42x2.5 mm^2
Cable dimensions	32.6 mm, 1.7 kg/m
Reeling length	57 m
Suspended length	62 m
Spreader speed	150 m/min
Spreader acceleration	0.63 m/s^2
Drive type	CTC - Cavotec Torque Control
Control mode	2 torque levels

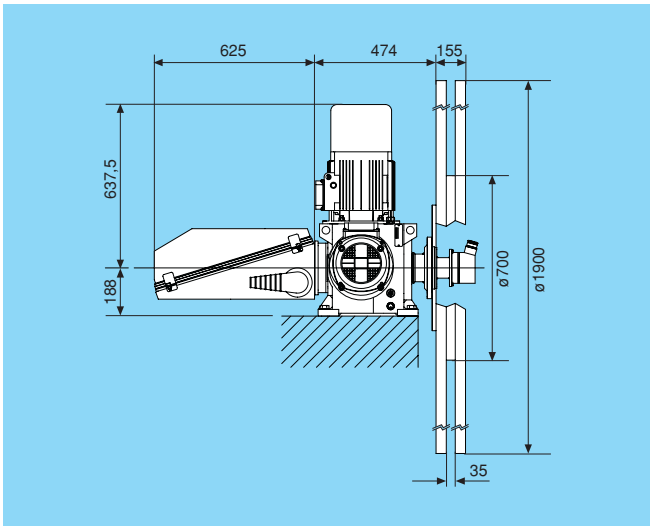

LS Spiralised Spreader Reel

The LS Spiralised Spreader Reel is used when it is not possible to use a monospiral configuration due to height restrictions. A spiral guide reliably lays the cable horizontally on the drum, so there is no need for a sophisticated and potentially troublesome indexing device. LS drums are always made from stainless steel.

Reel version	LS Spiralised
Type code	T5.0.CTC (2x5.5kW).4 LS910-1040X KV44/FCi/R
Cable type	44x2.5 mm^2
Cable dimensions	37 mm, 2.28 kg/m
Reeling length	50 m
Suspended length	55 m
Spreader speed	180 m/min
Spreader acceleration	0.75 m/s^2
Drive type	CTC - Cavotec Torque Control
Control mode	Linear torque control

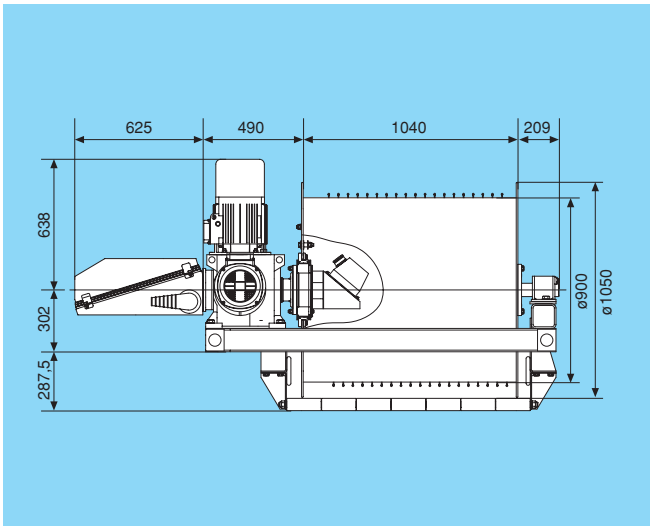

LSC Spiralised Spreader Reel

For applications with lighter cables, the LSC Spiralised Spreader Reel offers a less expensive and more compact alternative to the LS version.

Reel version	LSC Spiralised
Type code	T5.2.CTC (2x3kW).4 LSC1012-880X KV406/20/FCi/R
Cable type	24x2.5 mm^2
Cable dimensions	29.2 mm, 1.34 kg/m
Reeling length	57 m
Suspended length	62 m
Spreader speed	120 m/min
Spreader acceleration	1 m/s^2
Drive type	CTC - Cavotec Torque Control
Control mode	Linear torque control

The tables on this page only give an indication of general capacity and size. Always ask Cavotec Specimas for a specific quotation.

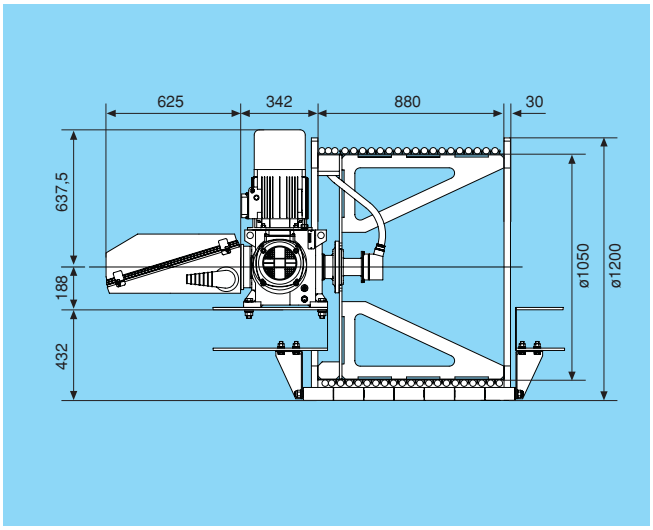

Collectors 600V / 1 kV

Cavotec Specimas collectors are made as separate sub-components and are interchangeable since the mounting flange for all torque units and gearboxes are standardised.
All collector housings are made in stainless steel and can be opened upwards or sideways due to their diagonal opening. Standard protection class IP55 but higher grades can also be supplied on request. All Cavotec Specimas collectors can be fitted with anti-condensation heating elements and with rotary cam limit-switches. Rings are available for nominal amperages of 30, 60, 120, 240, 400, 600 and 1200 Amps. Special non-standard ring configurations or combinations with hydraulic swivels or fibre optic rotary joints can be supplied on request.

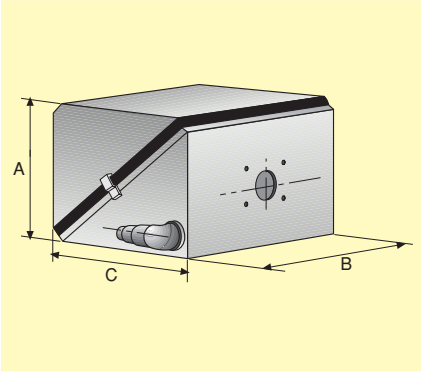

Type Amperage	Nominal Amperage	Continuous Amperage	Nominal Voltage	Max. cable size (mm)	Dimensions (mm) A	B	C
K 12	30	10	600	2,5	242	370	242
K 24	30	10	600	2,5	271	456	359
K 37	30	10	600	2,5	275	456	461
K 412	120	60	600	25	242	370	242
K 424	240	120	600	35	242	370	242
K 440	400	200	1000	70	272	456	272
K 460	600	300	1000	240	382	642	377
K4121	1200	600	1000	2 X 240	487	788	480

KP Brush

Stand still slipring applications often require a high degree of derating of the current capacity of conventional carbon brushgear. Increasing the physical size of the brushes is not always a solution, since the actual contact area does not increase proportionally. Cavotec Specimas has overcome this problem by developing a multicontact brushgear which has effectively doubled the capacity. This is achieved by a division of the brush into independent sections, thus ensuring an increased effective contact area.
The diagram shows a comparison between a conventional brushgear (BG) and a multi-contact brushgear (KP) of the same physical size carrying 300 Amp continuous.

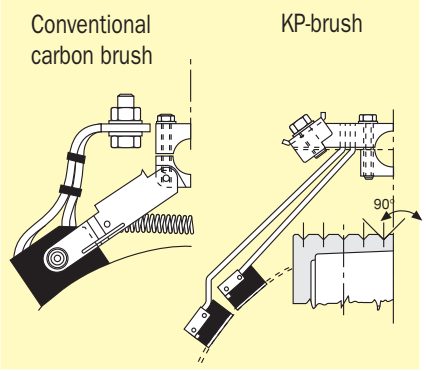

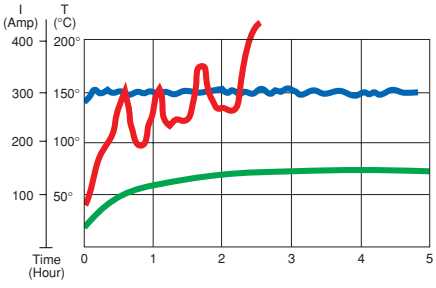

Continuous current 300 Amp
Temperature Carbon brush
Temperature Kp-brush

Medium voltage collectors 6, 10, 15, 20 kV

Cavotec Specimas high voltage collectors are also made as separate sub-components and are all interchangeable since the mounting flange for all torque units and gearboxes are standardised. All collector housings are made out of stainless steel. Standard protection class IP55 but higher grades can also be supplied on request. All Cavotec Specimas collectors can be fitted with anti-condensation heating elements and with rotary cam limit-switches. The collectors can easily be combined with a series of standard fibre optic rotary joints, either accumulator type or prism type for unlimited revolutions. Nominal voltages are 6kV, 10kV, 15kV and 20kV.

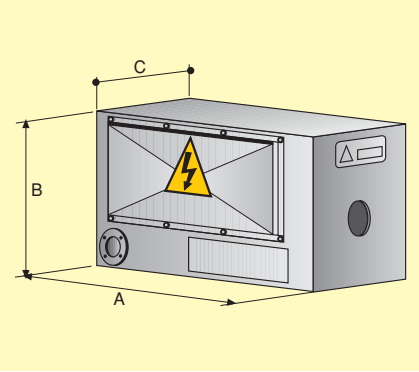

Non-standard ring configurations and special interlocking devices can be supplied on request.

Type	Nominal Amperage	Continuous Amperage	Nominal Voltage	Max. voltage	Dimensions (mm) A	B	C
K460/2710 - 6kV	600	300	6000	7200	850	573	730
K460/2713 - 10kV	600	300	10000	12000	1000	697	746
K460/4517 - 15kV	600	300	15000	18000	1100	925	1096
K460/4522 - 20kV	600	300	20000	24000	1450	1110	1200

Swivels

Cavotec Specimas can supply swivels for amy fluid for most of the standard torque units and gearboxes. These are made as independent sub-components which can easily be mounted inside the shaft and on the standardised rear mounting flange of the torque units.
All parts are either stainless steel or other non- corrosive material. Standard sizes are 1" and 2".
Working pressure for standard units is 10 bars; swivels for higher pressure and for hose sizes up to 6" are available on request.

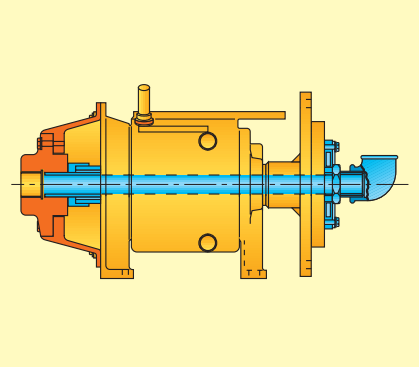

Size	Torque unit/ Gear boxes	Max Pressure (bar)	End fittings (Female)
1"	10.0/T3	10	1" Pipe thread
2"	20.0/T4	10	2" Pipe Thread

Fibre optic rotary accumulator (GFO)

In recent years optical signals are more and more frequently used in ports and terminals. Composite cables including both medium voltage cores and fibre optic bundles are common. To address these needs, Cavotec Specimas has developed a fibre optic rotary accumulator. The design is heavy-duty and made for rugged environments. The system can also be used as a stand alone rotary accumulator when the reel is equipped with fibre optic cable only. The housing is made of stainless steel, and includes anti-condensation heating element and rotary limit switches. The signal transmission is uninterrupted, so the only losses are due to the fibres and connectors themselves.
With a fibre length of about 15 m in the rotary connector, fibre dimming can be disregarded. For the rotary accumulator, including bilateral connections, a dimming of less than 3 dB is to be taken into account. The connection is made on both sides via plug connectors in the fixed and rotating terminal boxes.
Terminal strip and coupling bushings are included.

Technical data:

Operational temperature	-25°C to 60°C
Humidity	max 90% relative humidity, no surface condensation
Max cable reel drum revolutions	40/50/70/110
Fibre type	any commercially available fibre can be fitted
Normally requested fibres are	single mode 9/125 µm
	multi mode 50/125 µm
	multi mode 62,5/125 µm
Standard number of fibres are	2/4/6/8/10/12/14/18/24
Connectors most commonly used are	ST-PC with ceramic ferrule
	or FC-PC with ceramic ferrule.
	Other type delivered on request

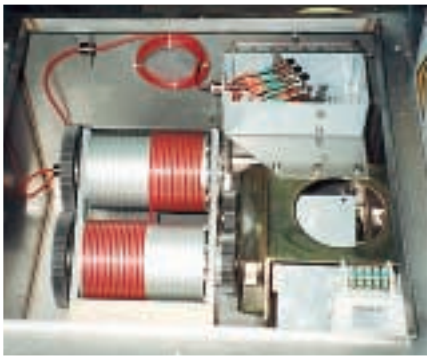

REELS024

No. turns	No. fibres	L	W	H
40	Up to 12	650	650	530
	Above 12	750	680	653
50	Up to 12	650	650	530
	Above 12	750	680	653
70	Up to 12	750	650	530
	Above 12	850	680	653
110	Up to 12	900	650	530
	Above 12	1000	680	653

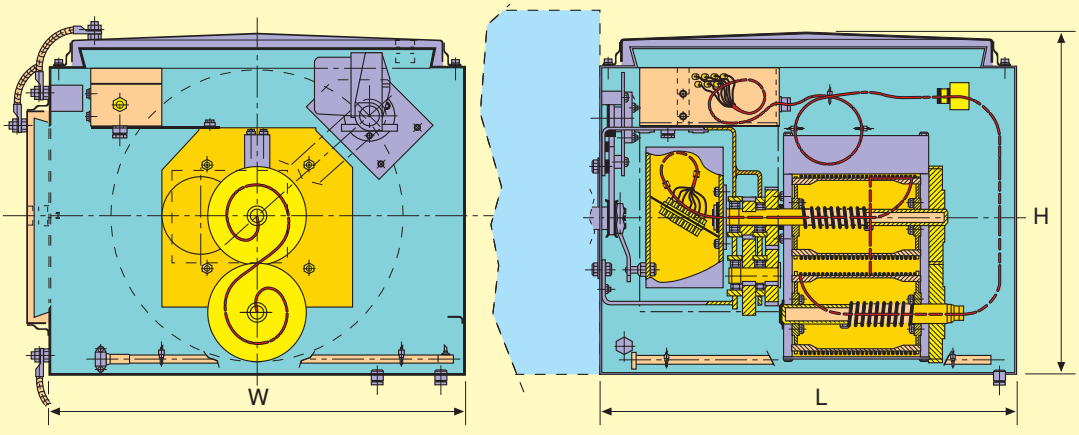

Cable guides

Cable guides are used both in horizontal and vertical applications.
In **horizontal** applications, they are essential in both modes of operation, i.e. reeling and unreeling, to ensure that regular laying of the cable is achieved. The cable guide is normally fitted with devices to sense crane location in respect to center feed point (left/right), slack cable and overtension.

In **vertical** applications it normally depends on the type of drum and its mounting wether a guide is used or not. If the drum is not of a monospiral type (i.e. semi wide or wide), it is recommended to use a guide below the drum to guide the cable centrally onto the drum and to absorb shocks and sway from the cable.

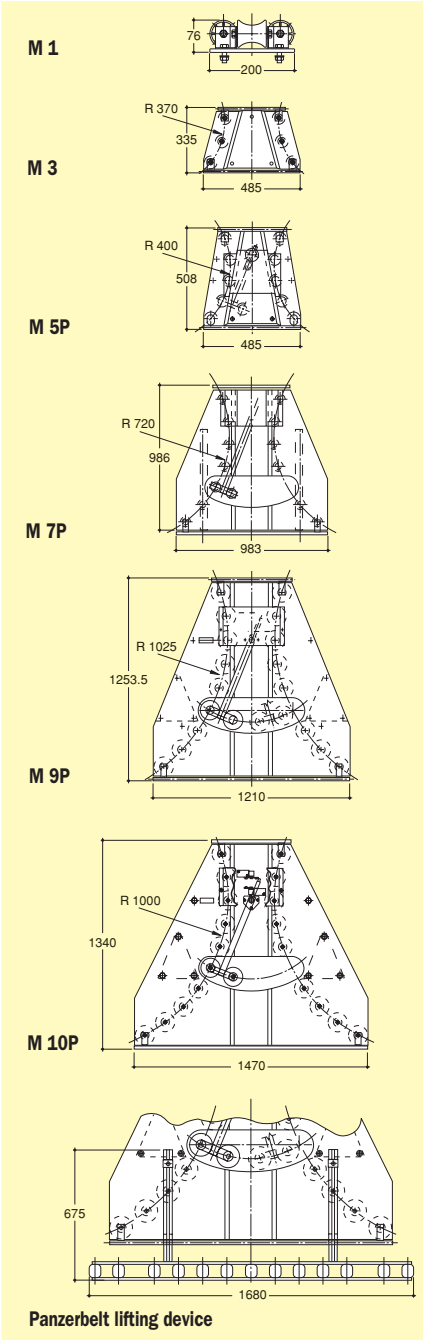

Type	Horizontal application	Vertical application	LV cable ø max mm	MV cable ø max mm	Weight kg
M 1		■	80	80	4
M 3	■		30	25	8
M 5 P	■		42	35	20
M 7 P	■		76	63	71
M 9 P	■		97	89	91
M 10P	■		97	89	105
Panzerbelt lifting device	■	(Optional for M7P, M9P, M10P)			15

Kawasaki Container Terminal Japan

REELS025

The Cavotec Specimas Service

Producing high quality products is one matter. Servicing them in such a way that they always perform to the highest standard during their whole life time is quite another. We provide 24/7 hrs assistance for mounting, commissioning, upgrades, repairs and training. Here at Cavotec Specimas we take great pride in the high level performance of our manufactured products. This is why we have a top grade specialised service team to support our customers wherever and whenever this is required. The Cavotec Specimas Service Team is operates all over the world through our own sales companies and distributors located in 30 countries. When you need us, we will be there to help you!

REELS060

1 Replacement of a damaged slipring unit on an offshore application in Qatar, at +48 deg. C

2 This electromagnetic cable reel is being commissioned in Korea for a compost plant application

3 One of our drums during erection on a harbor application in Singapore

4 The commissioning of a giant hose reel for Madrid metropolitan tunnel drilling.

5 Our service team at minus 30 deg. C in Northern Canada commissioning a DTC reel for a log handling application

2

REELS056

3

REELS059

4

5

REELS058

VARIO060


CAVOTEC

At work around the world

Cavotec Specimas equipment and technology is at work around the world in very diverse operating environments, from ports and terminals to offshore and energy and from mining and tunnelling to marine industry and shipyards. The pictures on these two pages show some typical examples of our equipment at work around the world.

Cavotec reel mounted on a maritime power supply application

A Pull & Store reel application at Copenhagen Port, Denmark

Cavotec Specimas reel in action in the Port of Dubai

Cavotec reel and Panzerbelt working together at a port installation

Panzerbelt application at work in the Port of Singapore

Cavotec reel at work in a Swedish mine

Panzerbelt in action at Southampton Port, UK

Giant tunnelling reels for the San Gothard tunnel, Switzerland

Pull & Store reels at work at Everglades terminal, USA

Cavotec reels in action at Port of Los Angeles, USA

Cavotec reels at work on a Stena Line High Speed Ferry

Cavotec reel on a surface drilling machine, USA

Cavotec Caddy mounted reel in action at Frankfurt Airport, Germany

Cavotec reel and connector at work on a drilling rig, Sweden

Connecting mobile equipment

Cavotec Group Headquarters

The Netherlands
Cavotec Group Holdings N.V.
Postbus 213
NL-2950 AE Alblasserdam
phone: + 31 78 693 0794
fax: + 31 78 693 1212

U.K.
Cavotec International Ltd
Stirling Way, Market Deeping
Lincolnshire PE6 8AS
phone: + 44 1778 346 769
fax: + 44 1778 341 850

For more information consult our websites:
www.cavotec.com
www.gantrex.com
www.fladung-airport-systems.de

Cavotec Group Manufacturing Companies

Australia
Cavotec Metool
Cardiff (Newcastle)
Perth

China
Cavotec China
Shanghai

Canada
Gantrex Canada Inc.
Ajax, Ontario

France
Cavotec RMS
Cergy Pontoise (Paris)

Germany
Cavotec Alfo
Overath (Köln)

Cavotec Aix Rail
Aachen

M. Fladung
Mömbris (Frankfurt)

Italy
Cavotec Specimas
Nova Milanese (Milan)

Sweden
Cavotec Connectors
Dalby (Malmö)

Cavotec Sverige
Haninge Stockholm

U.S.A.
Cavotec Inc.
Statesville, NC

Cavotec Partners

Belgium
Gantry
Nivelles

The Netherlands
De Jong's Liften
Leerdam

Italy
Brevetti Stendalto
Monza (Milan)

Pirelli Cavi
Milan

Tratos Cavi
Florence

New Zealand
Mooring Systems
Christchurch

Norway
Micro-control
Stjørdal

Cavotec Group Sales Companies and Distributors

Argentina
Cavotec Latin America
Buenos Aires

Australia
Cavotec Metool
Cardiff (Newcastle),
Brisbane, Sydney, Perth,
Melbourne

BeNeLux
Cavotec Benelux
Alblasserdam (Rotterdam)

Brasil
Marlin Gantrex
Rio de Janeiro

Chile
Gantrex
Santiago

China
Cavotec China
Shanghai

Denmark
Cavotec Danmark
Odense

Egypt
Ase, Cairo

Finland
Cavotec Finland
Espoo (Helsinki)

France
Cavotec RMS
Cergy Pontoise (Paris)

Germany
Cavotec Alfo
Eschborn (Frankfurt)

Hong Kong
Cavotec Hong Kong
Shatin

Italy
Cavotec Italia
Nova Milanese (Milan)

Korea
Cavotec Korea
Ulsan

Mexico
Gantrex Mexico
Monterrey

Norway
Cavotec Norge
Drammen

Singapore
Cavotec Singapore
Singapore

South Africa
Cavotec Gantrex
Germiston

Sweden
Cavotec Sverige
Stockholm

Taiwan
Ehrung Industrial
Taipei Hsein

U.A.E.
Cavotec Middle East
Dubai

U.K. & Ireland
Cavotec UK
Market Deeping

U.S.A.
Cavotec USA
Statesville, NC

Gantrex Inc
Pittsburgh, PA
Phoenix, AZ
Chicago, IL
Houston, TX

X2EN-REELS-00

May.2004